SUNRISE MEDICAL

Empulse®

POWER ASSIST

256069-GB Rev. D

Instructions for use

Empulse® R90®

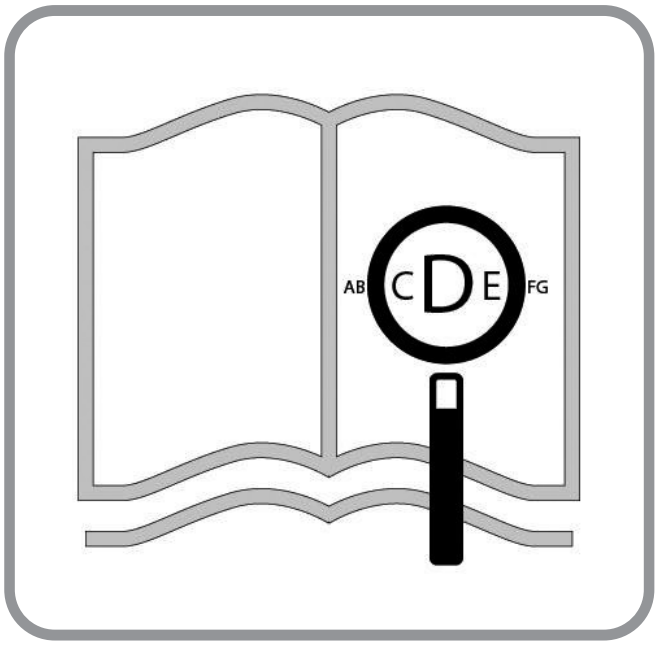

If you are visually impaired, this document can be viewed in PDF format at **www.SunriseMedical.co.uk**

Power Assist Components

EN

We at SUNRISE MEDICAL have been awarded the ISO-13485 certificate, which affirms the quality of our products at every stage, from R & D to production. This product complies with the standards set forth in EU and UK regulations. Options or accessories shown are available at extra cost.

EN 04

1. Latch Plug
2. Charger Port
3. Wheel Up/Down Button
4. Battery Release Button
5. Battery Display
6. Battery
7. Drive Wheel
8. Skidplate
9. Handle
10. V-Lock™ Release
11. Travel Bag
12. Device Charger
13. Docking Charger
14. Control Box
15. Rigid Wheelchair Attachment Hardware
16. Folding Wheelchair Attachment Hardware

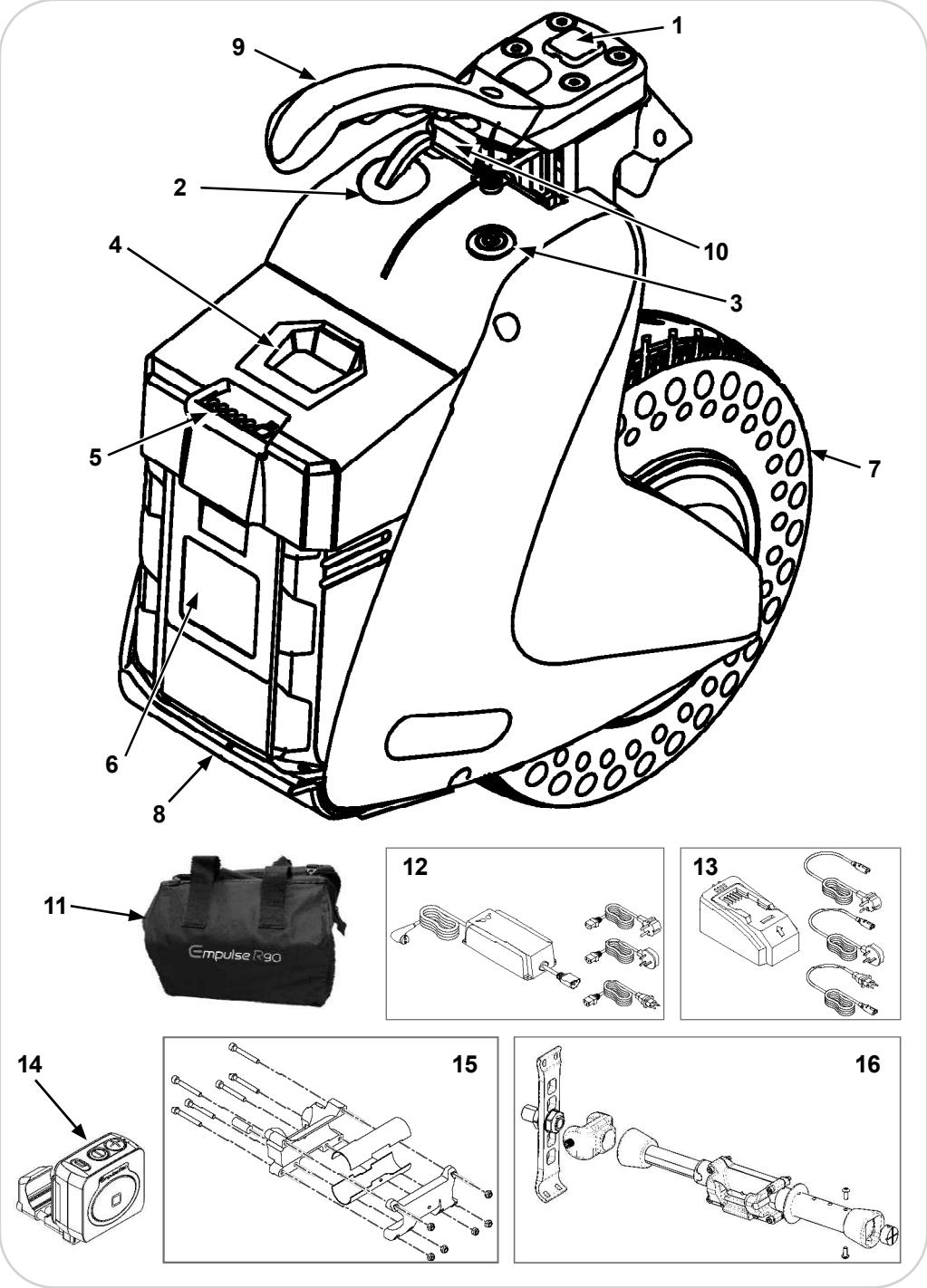

Contents

Foreword 5

Use 6

Area of application 6

1.0 General safety notes and Driving limits 7

Safety instructions – prior to each ride 8
Safety instructions – while driving 8
Safety instructions - after your ride 8

2.0 Warranty 9

Liability: 9

3.0 Handling 10

Delivery: 10
Unpacking: 10
Storage: 10
Transport: 10

4.0 Fitting to the wheelchair for the first time 11

4.1. Attachment of the receiver to the wheelchair 11
4.2 Wheel Up height setting 14
4.3 Attachment of the R90 to the receiver 15
4.4 Wheel up height adjustment 15
4.5 Charging and Attaching the Battery 16
4.6 Mounting the Control Box 16
4.7 Setting up the Control Box 16
4.8 Setting up the Sunrise Intelligence App 17
4.9 Attachment and Removal of the R90 from the Receiver 17
4.10 Check after Set-up or Adjustment 17
4.11 Additional Warnings 17

5.0. Using the device 18

5.1. Checking device before use 18
5.2 Wheel Up/Down 18
5.3 Operating the control box 19
5.4 Driving the R90 20

6.0 Battery and charger 22

6.1 Introduction 22
6.2 Safety instructions for the battery 22
6.3. Notes for transportation in aeroplanes 24
6.4. Battery types 24
6.5. Checking the battery 25
6.6 Low battery levels 25
6.7. Detaching the battery 25
6.8. Charging the battery 26
6.9 Battery warranty 28

7.0 Maintenance and troubleshooting 29

7.1 Tyre maintenance and replacement 29
7.2 Regular maintenance 31
7.3 Troubleshooting 32

8.0 Technical Specifications 33

9.0 Notes on storage 35

10.0 Cleaning and hygiene 35

11.0 Disposal and recycling 36

12.0 Nameplate 37

Definitions of words used in this manual

Word	Definition
⚠DANGER!	Advice to the user of Potential Risk of serious injury or death if the advice is not followed
⚠WARNING!	Advice to the user of a risk of injury if the advice is not followed
⚠CAUTION!	Advice to user that potential damage to equipment may occur if the advice is not followed
NOTE:	General advice or best practice
	Consult instructions for use

NOTE:

- Please keep a note of your local service agent's address and telephone number in the space provided.
- In the event of a breakdown, contact them and try to give all relevant details so they can help you quickly.
- The power assist devices shown and described in this user guide may not correspond in every detail exactly to your own model. However, all instructions are completely relevant, regardless of possible detail differences.
- The manufacturer reserves the right to alter without notice any weights, measurements or other technical data shown in this manual. All figures, measurements and capacities shown in this manual are approximate and do not constitute specifications.

Dealer signature and stamp

Foreword

Dear Customer,

We are very happy that you have decided in favour of a high-quality product from SUNRISE MEDICAL.

This owner's manual will provide numerous tips and ideas so that your new power assist device can become a trustworthy and reliable partner in your life.

For Sunrise Medical, it is very important that we have a good relationship with our customers. We like to keep you up-to-date about new and current developments at our company. Keeping close to our customers means: fast service, as little red tape as possible, working closely with customers. Whenever you need replacement parts or accessories, or if you just have a question about your power assist device – we are there for you.

We want you to be satisfied with our products and service. At Sunrise Medical we are constantly working to develop our products further. For this reason, changes can occur in our range of products with regard to form, technology, and equipment. Consequently, no claims can be construed from the data or pictures contained in this user's manual.

The management system of SUNRISE MEDICAL is certified to ISO 13485 and ISO 14001.

As the manufacturer, SUNRISE MEDICAL, declares that the product conforms to the Medical Device Regulation (2017/745).

As the manufacturer, SUNRISE MEDICAL, declares that the product conforms to the UK Medical Devices Regulation 2002 No. 618.

NOTE:
General user advice.
Not following these instructions may result in physical injury, damage to the product or damage to the environment!

Notice to the user and/or patient: Any serious incident that has occurred in relation to the device should be reported to the manufacturer and the competent authority of the Member State in which the user and/or patient is established.

B4Me special adaptations
Sunrise Medical strongly recommends that in order to ensure that your B4Me product operates, and performs as intended by the manufacturer; all the user information supplied with your B4Me product is read and understood, before the product is first used.

Sunrise Medical also recommends that the user information is not discarded after reading it, but it is kept safely stored for future reference.

Medical Device Combinations
This medical device is always to be used in combination with one other Medical Device or other product. Information on which combinations are possible can be found at www.SunriseMedical.co.uk. All combinations listed have been validated to meet the General Safety and Performance Requirements, Annex I Nr. 14.1 of the Medical Device Regulation 2017/745.

Guidance on the combination, such as mounting, can be found within this manual.

Please contact your local, authorised SUNRISE MEDICAL dealer if you have any questions regarding the use, maintenance or safety of your power assist device.

In the case of there being no authorised dealer in your area and you have any questions regarding product safety or recalls, contact Sunrise Medical either in writing or by telephone.

Sunrise Medical Ltd.
Thorns Road
Brierley Hill
West Midlands
DY5 2LD
England
Phone: 0845 605 66 88
Fax: 0845 605 66 89
www.SunriseMedical.co.uk

Do not use your power assist device until this manual has been read and understood. Please follow the instructions contained within the Owner's Manual.

Use

The Empulse R90 is a power assist device, which is attached to a wheelchair, to support the mobility and integration of the wheelchair user in daily life. It is designed for personal use indoors or outdoors.

The maximum user weight (including both the user and any weight of accessories fitted to the power assist device) is marked on the serial number label. The serial number label is located on the device as well as in the owner's manual.

Warranty can only be taken on if the product is used under the specified conditions and for the intended purposes.

Service life
The expected life of the power assist device is 5 years, provided that:
- It is used in strict accordance with the intended use.
- All service and maintenance requirements are fulfilled.

⚠ **DANGER!**

- Do not fit any unauthorized electronic equipment.

This device complies with part 15 of the FCC Rules. Operation is subjected to the following two conditions: (1) this device may not cause harmful interference, and (2) this device must accept any interference received, including interference that may cause undesired operation.

Area of Aplication

The power assist device provides the user with the potential to safely cover long distances in an ergonomically and ecologically efficient manner, using their own wheelchair. It expands the activity radius significantly. The attached wheelchair must be equipped in accordance with road traffic regulations when used on public roads, pavements and spaces.

Indications
The adjustability, as well as the modular design, mean that it can be used by those who cannot walk or have limited mobility because of:
- Paralysis
- Loss of extremity (leg amputation)
- Extremity defect deformity
- Joint contractures/joint injuries
- Illnesses such as heart and circulation deficiencies, disturbance of equilibrium or cachexia as well as for elderly people who still have strength in the upper body.

Contraindications
The power assist devices shall not be used in case of:
- Perception disorder
- Imbalance
- Loss of both arms
- Joint contracture or joint damage on both arms
- Seating disability
- Physically and mentally not capable of safely operating the power assist device in all operating situations.
- Not meeting the legal requirements for use on public roads.

Operating Conditions
The power assist device should be able to cope with tarmac surfaces and firm paths with different topography. Avoid driving on unpaved or loose surfaces (e.g. on loose gravel, in sand, mud, snow, ice or through deep puddles of water), as this may expose the user to unforeseen risks.

In the absence of approval, in accordance with the road traffic laws, the Empulse R90 may not be driven on public roads, bicycle-lanes and pavements. You need to inform yourself about the country specific legislation regarding usage and your legal obligation to insure the Empulse R90. When you´re travelling with your R90, always check the specific legislation in the respective country.

NOTE:
Please note that driving a wheelchair requires sufficient cognitive, physical and visual skills. The user must be able to assess the effects of actions during the operation of the wheelchair and, if necessary, to correct them. These capabilities and the safe use of the additionally attached components cannot be assessed by Sunrise Medical as a manufacturer. We cannot accept any liability for any damage resulting from this.

Please refer to the operating instructions of the wheelchair and the additionally mounted components. Instruct the user in the safe use of the wheelchair and the additionally mounted components. Inform users of specific warnings that need to be read, understood, and respected.

1.0 General safety notes and Driving limits

The technology and construction of this power assist device have been designed to provide maximum safety. International safety standards currently in force have either been fulfilled or exceeded in parts.
Nevertheless, users may put themselves at risk by improperly using their power assist device. For your own safety, the following rules must be strictly observed. Unprofessional or erroneous changes or adjustments increase the risk of accident. As a power assist device user, you are also part of the daily traffic on streets and pavements, just like anyone else. We would like to remind you that you are therefore also subject to any and all traffic laws.

Be careful during your first ride with this power assist device. Get to know your power assist device.

⚠ **WARNING!**

- Exceeding the maximum load can lead to damage to the power assist device, loss of control, or potential injury to the user and other people.
- Exercise caution when using the power assist device. For example, avoid negotiating obstacles such as, steps, curbs, path edges or dropping down gaps without slowing down first.
- The power assist device is not tested and approved according to ISO 7176-19. It is therefore not allowed to transport the user in the wheelchair with the R90 docked in a car. When transporting a combined unit made up of a power assist device and wheelchair, the user must transfer onto the vehicle seat and must not sit on the combined unit. The combined unit itself (without user) must be tied down during transportation and secured against slipping.
- This power assist device should be used exclusively to convey one person at a time. Any other use does not comply with the intended purpose.
- Use of the power assist device is only recommended for those who have the right physical and psychological constitution to be able to cope with public traffic.
- Please note that you are subject to any and all traffic laws when riding in public traffic.
- As a beginner, you should ride particularly carefully at first.
- Familiarise yourself with the stopping distances from various speeds.
- Familiarise yourself with the general traffic laws!
- In order to achieve a stable ride when travelling straight ahead, wherever possible, you should avoid hasty steering movements when travelling at speed or going round corners.
- The speed must be adjusted to suit the technical capabilities of the device, terrain and operator.
- Only ride on asphalt paths, or firm, smooth surfaces.
- Use caution when riding over curbs, steps, potholes, etc. as there is an increased risk of tipping over.
- Adjust your method of driving to your capabilities.
- Ride slowly and carefully, particularly when riding round corners.
- Do not touch the motor, because it can get very hot.
- Your power assist device should be serviced by your dealer at regular intervals (minimum every year).
- As with all moving parts, there is a risk that fingers could become trapped. Please always handle carefully.
- If the power assist device is subject to direct sunlight / external heat sources or low temperatures for long periods, parts of your power assist device could become very hot (>41°C) or very cold (<0°).
- The power assist device should not be used in stormy conditions, heavy rain/snow or on slippery or damaged surfaces.
- You should only use product combinations which have been approved by Sunrise Medical.
- The standard version of your power assist device has been tested on the applicable requirements with respect to electromagnetic radiation (EMC requirements) In spite of these tests:
- It cannot be excluded that electromagnetic radiation may have an influence on the power assist device. For example:
  - mobile telephony
  - large-scale medical apparatus
  - other sources of electromagnetic radiation
- It cannot be excluded that the power assist device may interfere with electromagnetic fields. For example:
  - shop doors
  - burglar alarm systems in shops
  - garage door openers

  In the unlikely event that such problems do occur, we request that you notify your dealer immediately.

⚠ **DANGER!**

CHOKING HAZARD – This mobility aid uses small parts which under certain circumstances may present a choking hazard to young children.

NOTE: The power assist devices shown and described in this user guide may not correspond in every detail exactly to your own model. However, all instructions are completely relevant, regardless of possible detail differences. The manufacturer reserves the right to alter without notice any weights, measurements or other technical data shown in this manual. All figures, measurements and capacities shown in this manual are approximate and do not constitute specifications.

The device has moving and rotating parts. Contact with moving parts may result in serious physical injury or damage to the device. Contact with the moving parts of the device should be avoided.

- V-Lock™ Latching Mechanism
- Wheel and latching block
- Wheel and shroud

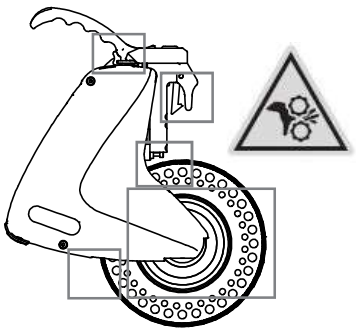

Safety instructions – prior to each ride

⚠ **CAUTION!**

- Check the conditions of your wheels, (including the wheels of your wheelchair) visually, (spokes and rims, damages of tyres) as well as the pressure of the tyres. The correct air pressure is indicated on the tyre.
- Tyre pressure which is too low or too high will have a negative effect on wear and tear, and the driving performance.
- Always check that the tread depth of your tyres is okay.
- Check that all components, especially the bolts, are tight.
- Check the frame and the components of your wheelchair for any damage, (e.g. cracks).
- When attaching the device to the wheelchair, ensure the device is locked in place by observing the position of the latch release handle.
- Ensure that the coupling receiver mounted to the wheelchair receiver is tight and secure. For folding wheelchairs, ensure that the attachment bar is properly secured to both axle plates.
- Ensure that your feet cannot slip off the foot plate of your wheelchair. Use a special fixing tool if necessary.
- Check all cables and electrical connections.
- Check that the battery is installed correctly and fully charged.
- Switch the battery on and check the light.
- Verify there is no unusual vibration in the device. Inspect for any problems. Your Sunrise Medical authorized dealer can help you find and correct the problem(s).

Safety instructions – while driving

⚠ **WARNING!**

- Make yourself familiar with the device in flat terrain before driving up or down slopes.
- Always adapt your speed to your driving capability and to the traffic - / terrain conditions
- Use particular caution when approaching stairs, edges, drops or other hazard areas.
- Reduce your speed to walking pace and lean your body inwards, when driving round a bend.
- When driving on pedestrian areas, observe the maximum permitted speed (walking speed).
- Always follow the road traffic regulations when driving on public roads and footpaths.
- Avoid driving on unpaved or loose surfaces (e.g. on loose gravel, in sand, mud, snow, ice or through deep puddles of water).
- Avoid abrupt steering actions.
- Avoid driving in parallel to slopes.
- Avoid turning on slopes.
- The driving style and speed should be always adjusted so that the product can be safely stopped at all times.
- Towing or using a trailer is not permitted.
- Driving on stairs is not permitted.
- It must be avoided that any wheelchair components or parts of your body get trapped when driving over or passing obstacles. This could result in falls and serious injuries as well as damage to the product.
- When driving on wet surfaces, there is an increase slip hazard because the traction of the tyres is reduced. Adapt your driving style accordingly.

⚠ **CAUTION!**

- Prevent the device from coming into contact with both sea water and road salt during operation, transportation, or storage: sea water and road salt are caustic and may damage the device.
- Prevent the device from coming into contact with sand: sand can permeate into the moving parts of the device, causing extensive wear on these parts.
- Do not use the device if temperatures are outside the range listed in Section 8.0 Technical Specifications.
- Do not push and/or tow any objects with the device.
- Do not drive through puddles of water.
- Ensure the battery cover is secure.
- Never take your device into a shower, tub, pool, or sauna.
- Dry the device as soon as you can if it gets wet, or if you use water to clean it.

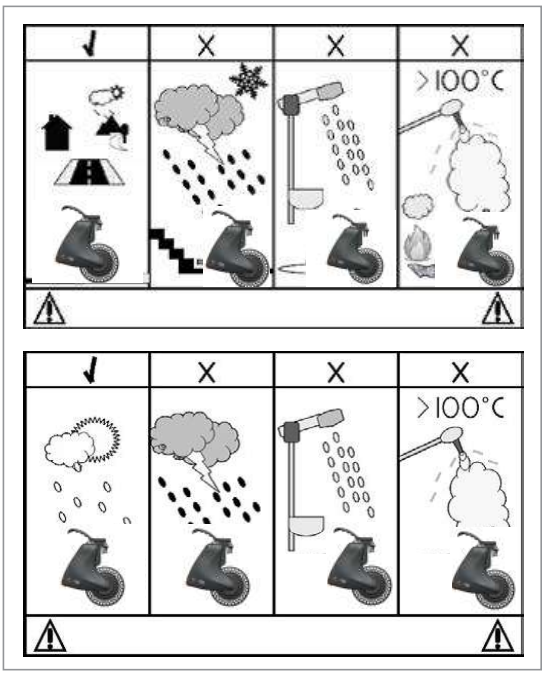

Safety instructions - after your ride

- Switch off the device immediately when it is not in use to avoid accidental operation / movements.
- Switching off helps to preserve the battery charge.

2.0 Warranty

YOUR LEGAL RIGHTS ARE NOT LIMITED BY THIS GUARANTEE.
Sunrise Medical* provides a guarantee, as set out in the warranty conditions, for wheelchairs to its customers covering the following.

Warranty conditions:

1. If a part or parts of the power assist device require repair or exchange as a consequence of a manufacturing defect within 24 months after delivery to the purchaser, then the affected part or parts will be repaired or replaced for free. The warranty will only cover manufacturing defects.

2. To enforce the warranty, please contact the supplier of your device – e.g. the Sunrise Medical Approved dealership or Healthcare provider with the exact details of the nature of the difficulty. Should you be using the device outside the area covered by the Sunrise Medical customer service agent, repairs or replacement will be carried out by another agency as designated by the manufacturer. The device must be repaired by a customer service centre/ dealer designated by Sunrise Medical.

3. For parts, which have been repaired or exchanged within the scope of this warranty, we provide a warranty in accordance with these warranty conditions for the remaining warranty period for the device in accordance with point 1).

4. For original spare parts which have been fitted at the customer's expense, these will have a 12 months guarantee, (following the fitting), in accordance with these warranty conditions.

5. Claims from this warranty shall not arise, if a repair or replacement of a product or a part is required for the following reasons:

   a. Normal wear and tear, which include batteries, armrest pads, upholstery, tyres, brakes shoes, etc.

   b. Any overloading of the product, please check the EC label for maximum user weight.

   c. The product or part has not been maintained or serviced in accordance with the manufacturer's recommendations as shown in the user instructions and/or the service instructions.

   d. Accessories have been used which are not specified as original accessories.

   e. The product or part having been damaged by neglect, accident or improper use.

   f. Changes/modifications have been made to the product or parts, which deviate from the manufacturer's specifications.

   g. Repairs have been carried out, before our Customer Service has been informed of the circumstances.

6. This guarantee is subject to the law of the country in which the Sunrise Medical product was purchased. * Means the Sunrise Medical facility from which the product was purchased.

Liability:
If the power assist device:

- Is handled improperly
- Is not maintained in accordance with the maintenance schedule
- Is commissioned and used contrary to the instructions in this manual
- Has had repairs or other works carried out by non-authorised persons, or third-party parts installed or connected without prior agreement with Sunrise Medical, then Sunrise Medical is not responsible for the safety of the power assist device.

3.0 Handling

Delivery:
Your new power assist device is delivered fully assembled in a cardboard box. In order to avoid any damage during transportation, loose parts or parts to be fitted, are packed separately in the cardboard box.

Unpacking:
- Check the shipping cardboard box for external damage which may have been caused during transportation.
- Remove all packaging material.
- Take the power assist device carefully out of the box and check that it is complete.
- Check all parts for surface damage, scratches, cracks, dents, distortions and other defects.

NOTE: Should you find any damage, or if any parts are missing please let us know immediately.

⚠ **CAUTION!**

- The power assist device must be handed over ready to use from Sunrise Medical or an authorised Sunrise Medical dealer.
- Before using for the first time, the battery should be fully charged.

NOTE:
- Wherever torque settings are specified, it is strongly recommended that a torque meter (not included), is used to verify correct torque specification is achieved. If no other information is given, refer to the Maintenance section for general torque values.

⚠ **CAUTION:**

- Some of the screws that are used in manufacture have a thread lock (blue dot on the threads) and can be used up to three times, then they must be replaced by new screws with thread lock. Alternatively, you can put Loctite™ 243. Apply threadlock to the screws and re-fit them.

Storage:
The power assist device should always be stored in an environment with low humidity, on an easy to clean surface.

Transport:
It is not allowed to transport the user in the wheelchair with the R90 docked in a car. When transporting a combined unit made up of a power assist device and wheelchair vehicle, the user must transfer onto the vehicle seat and must not sit on the combined unit. The combined unit itself (without user) must be tied down during transportation and secured against slipping.

This label on the product indicates that the push-device is not tested and approved according to ISO 7176-19. It is therefore not allowed to transport the user in the wheelchair with the R90 docked in a car.

⚠ **WARNING!**

- Always use a properly secured vehicle seat.
- The product and all its components must be secured during transport so that they are not damaged (e.g. by falling over) and do not become any risk to other people.

4.0 Fitting to the wheelchair for the first time

The R90 must be adjusted according to specific needs of the user and to the wheelchair to which it is attached. Setting up the device includes:

- Attachment of the receiver clamp to the wheelchair
- Setting the operating height of the R90
- Attachment of the R90 to the wheelchair mounted receiver
- Setting the wheel up height
- Charging and installing the battery
- Insertion and removal of the R90 into the wheelchair receiver
- Check after set-up and adjustment

⚠ WARNING

- Attachment and set-up of the R90 should be done by a Sunrise Medical authorized dealer. Improper attachment and set-up of the device onto a wheelchair may result in damage to or failure of the device, the wheelchair, or injury to the user.

4.1. Attachment of the receiver to the wheelchair

Note: there are two size receiver clamps: the small is 32 mm and the large is 45mm. If the camber tubes are a different size than these size receiver clamps (32mm and 45mm), then item 6 and 7 (receiver mount shims) will be required to attach the receiving mount and hardware.

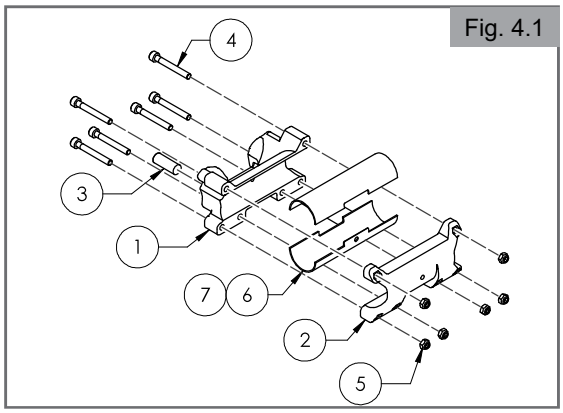

Fig. 4.1

1. Attaching the receiving mount and hardware onto wheelchairs:
   a. There are two receiver clamp sizes, one sized to fit a 32mm camber tube and one to fit a 45mm camber tube. Receiver mount shims are available to fit alternate sized camber tubes. A shim is available for the 32mm receiver that will accommodate a 25mm and 30mm camber tube. For the 45mm receiver, 35mm and 38mm receiver shims are available. When using a shim, snap each half of the shim (6 and 7) around the camber tube and apply each half of the receiver (1 and 2) completely over the shim.
   b. Attach the hardware (4 and 5) with 4mm allen wrench and tighten the screws until they barely allow the receiver clamp to rotate and slide transversely.
   c. Move the receiver clamp to the center of the camber tube by measuring from the clamp edge to the side frame of both sides and make sure the distance is the same.
   d. Rotate the receiver clamp until level bubble (3) is centered or slightly back so that when weight is added on the chair, the level bubble will be centered.
   e. Tighten all six fasteners (4 and 5) to 7.8 Nm.

2. Removing the receiving mount and hardware from Rigid wheelchairs:
   a. Remove all six fasteners (4 and 5).
   b. Remove receiver clamps (1 and 2) and level bubble (3).
   c. Remove inserts (6 and 7) if used.

⚠ WARNING!

The receiver must be properly centered when mounted to the wheelchair camber tube. It must be centered both horizontally (i.e. between the two large drive wheels) and vertically. The receiver must be set such that the level bubble is in between the two lines to ensure it is vertical. This must be done on flat, level ground. Failure to do so may result in damage to the device, wheelchair, or risk of injury to the user.

⚠ WARNING!

The receiver must be fastened to the camber tube using proper torque. The fastener torque is provided in Section 4.1. Failure to do so may result in improper function of the device, wheelchair, or risk of injury to the user.

⚠ WARNING!

Prior to attachment of the device into its receiver, ensure that the device is in proper operating condition with no broken or damaged components. Also, inspect the receiver as well as the battery to ensure they are in proper operating condition. This includes inspection for loose hardware. Failure to do so may result in damage to the device, wheelchair, or risk of injury to the user.

For Folding Frame wheelchairs (Fig. 4.2 - Fig. 4.7)

Note: Folding axle adapters will be attached to camber tube but will require adjustment to center on camber tube.
Note: Folding Frame wheelchairs always use small 32mm receiver clamps without inserts.
Note: The Folding Axle Assembly (1) is adjustable based on a range of chair seat widths. To ensure the Folding Axle Assembly (1) functions properly increasing the spring force may be required. Refer to step 5 for instructions on how to increase the spring force.
Note: The Folding Axle will ship from the factory setup for right hand installation (Fig. 4.2). To flip the receiver mount (10), loosen and remove receiver mount hardware. Flip receiver mount so that the bubble level is on the same side as the brass bushing. See Fig. 4.3 for left hand installation.
Note: All directions for mounting the R90 can be found on the R90 page at www.SunriseMedical.com. This includes directions for specialty brackets including the QS5X Adapter Plate.

1. Attaching small/large Folding Axle Adapters and hardware onto wheelchairs:
   a. Using 5mm allen wrench, attach Folding Axle Adapters (3) and hardware (2) onto Axle Plates (4). Folding Axle Adapters must be centered over the Axle Sleeve (5).
      Note: The Folding Axle Adapter (3) requires the Axle Sleeve (5) to be a minimum distance of approximately 23mm from the frame. If the Folding Axle Adapter (3) does not fit as shown in Fig 4.4, the CG (center of gravity) will need to be adjusted to the next available CG position as shown in Fig. 4.5.
   b. Tighten hardware on one side. Leave one side loose. Follow Step 2 to align Folding Axle Adapter with Folding Axle. Once properly aligned, tighten loose side.
   c. Tighten hardware (2) to 9 Nm.
      Note: Folding Axle Adapter (3) can be flipped to more easily access the set screw. Mount the Folding Axle Adapter (3) in an orientation so access to set screw is in the desired location.
2. Attaching Folding Axle to Wheelchair:
   a. Grab the outside of the larger tube to avoid pinching your hand while attaching the assembly.
   b. Slide the Axle Adapter Receiver (6) over the Folding Axle Adapter (3) on one side.
   c. Compress the Folding Axle Assembly (1) until you are able to slide the other Axle Adapter Receiver (6) over the corresponding Folding Axle Adapter (3).
   d. Check to ensure the Folding Axle Assembly (1) is securely compressed between the wheelchair's two Axle Plates (4).

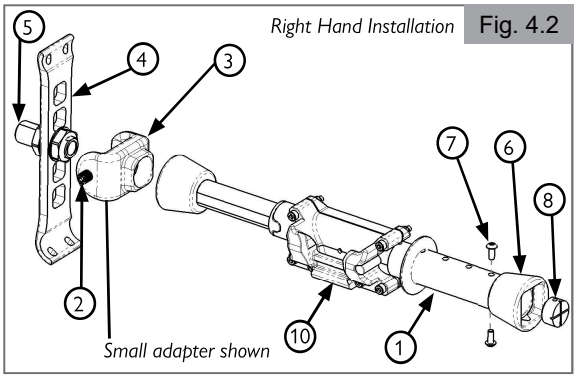

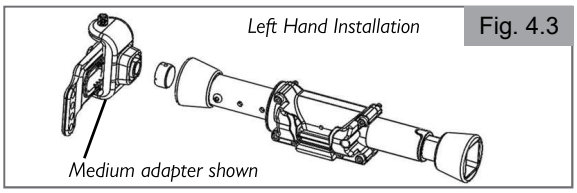

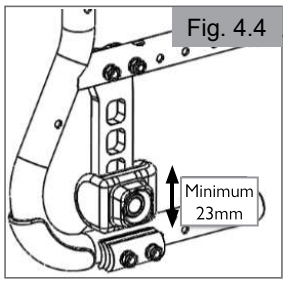

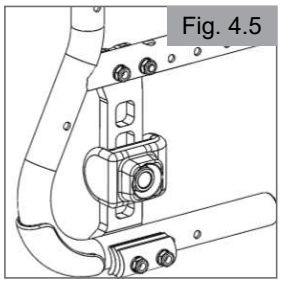

3. Centering the receiving mount and hardware onto wheelchair (Fig. 4.6):
   a. Loosen the hardware (9) with 4mm allen wrench so the mount (10) can be positioned correctly.
   b. Move the mount to the center of the camber tube by measuring from the mount edge to the side frame of both sides and ensure the distance is the same.
   c. Rotate the mount until level bubble (11) is centered when weight is added on the chair. Note: Weight in the chair causes the mount to tilt back slightly.
   d. Tighten all six fasteners (9) to 7.8 Nm.
4. Removing Folding Axle Assembly:
   a. Ensure the Power Assist Module is already removed from the Folding Axle Assembly (1).
   b. Grab the Folding Axle Assembly (1) and compress the larger tube toward the smaller tube until the Axle Adapter Receiver (1) is free of the Folding Axle Adapter (3).
   c. Pull the Folding Axle Assembly (1) toward the rear of the chair.
5. Removing the Folding Axle Adapter and hardware from Folding Axle Assembly (1):
   a. Remove hardware (2).
   b. Remove Folding Axle Adapters (3) and hardware (2) from Axle Plates (4).
6. Adjusting Folding Axle Spring Force (Fig. 4.7):
   a. Remove both screws (7) using 3mm allen wrench. Use screwdriver to keep Spring Stop (8) from falling out.
   b. To increase spring force move Spring Stop (8) to new hole location closer to center of assembly. Use screwdriver to align Spring Stop (8) with hardware (7).
   c. Attach both screws (7) to properly hold Spring Stop (8).
   d. Attach Folding Axle Assembly (1) onto chair to check spring force. Adjust as necessary.

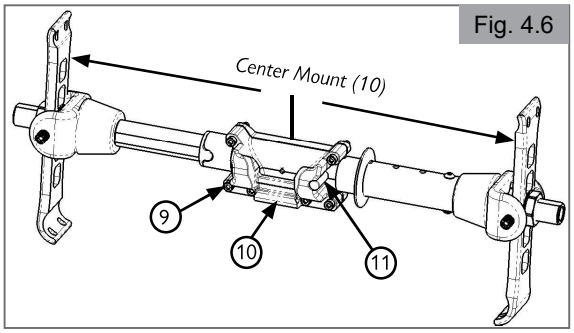

Fig. 4.6

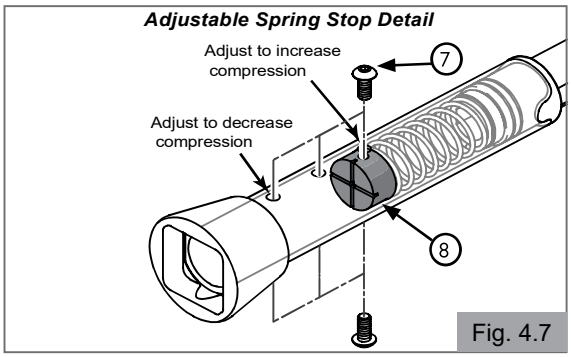

Fig. 4.7

4.2 Wheel Up height setting (Fig. 4.8 - Fig. 4.10)

To ensure proper fit and traction of the device, the height between the latching mechanism and the drive wheel must be properly set. If this is not set to match the height between the wheelchair camber tube/folding axle tube, the device will not perform properly. Follow the steps below to properly set the height of the device.

1. Use the included wheel height gauge to measure and set the drive wheel. The stair-shaped gauge has the words “GO“ and “NO GO“ engraved on the respective steps
2. With the R90 attached to the wheelchair and the wheel up slide the gauge under the drive wheel. The R90‘s drive wheel should be higher than the first step engraved with “GO“ and lower than the second step engraved with “NO GO“. For further information on wheel height refer to Table 1.
3. If any adjustment is needed, refer to section 4.4.
4. With the height of the device now confirmed, it is ready to be set-up on the wheelchair.

Table 1: Wheel up height setting

	Dim A		Dim B	Dim C
	Wheel up default setting	Wheel up fine tune adjustment setting	Recommended gap between ground and bottom of the wheel (Fig. 4.10)	Height between ground and the center of the axle tube (Fig. 4.8)
	Height between the latching radius and bottom of the wheel with set screw adjusted to normal position (Fig. 4.9)	Use the set screw (Fig 4.16) to adjust Dim A to the following height (Fig. 4.9)		
For 540mm (24-in) Wheel Configuration	292mm	283mm to 305mm	6mm to 9mm	304mm
For 559mm (25-in) Wheel Configuration	298mm	296mm to 321mm	6mm to 9mm	317mm

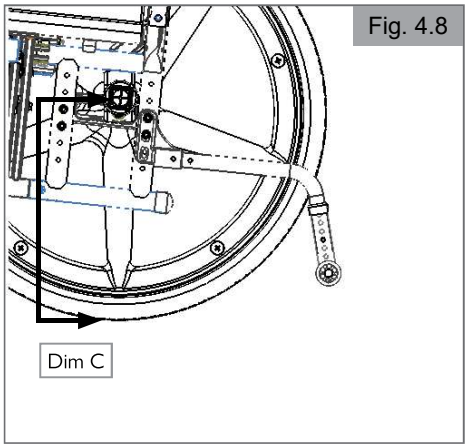

Fig. 4.8

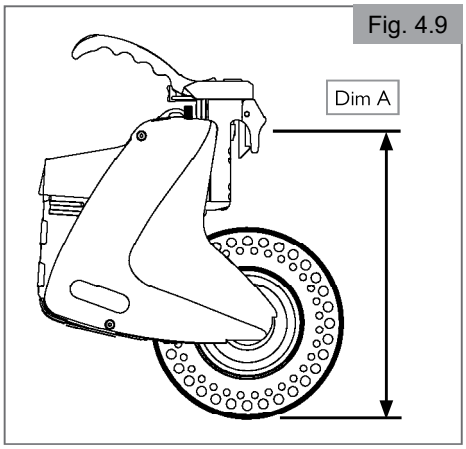

Fig. 4.9

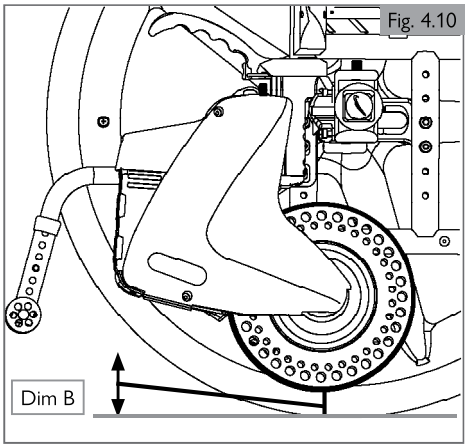

Fig. 4.10

4.3 Attachment of the R90 to the receiver (Fig. 4.11 - Fig. 4.14)

Prior to attaching the device on to the wheelchair for the first time, it must be set to the correct attachment position. The correct attachment position is known as the wheel up position. This is the same position that will allow the device to be elevated off the ground while remaining attached to the wheelchair. The second position is the wheel down position. The wheel up position and the wheel down position are shown in Fig. 4.11 and Fig. 4.12. The device must be attached to the receiver while in the wheel up position. The wheel down position is used when the device is assisting with the propulsion of the wheelchair.

1. Place a charged battery into the battery receiver on the device.
2. Ensure the device is now in the wheel up position by pushing the Wheel Up/Down button and ensuring that the Wheel Up/Down button light is off. When the R90 is powered OFF, it will be in the wheel up position.
3. Using the handle, lift the device into position and drop the tapered V-Lock™ tongue into the wheelchair receiver. (Fig. 4.13 and Fig. 4.14)
4. Ensure that the latch hook properly locks the V-Lock into place.

⚠ WARNING!

The V-Lock latch must be secured to the receiver. If not, the latch may become displaced from the receiver during operation. Failure to do so may result in improper function of the device, the wheelchair, and/or injury to the user.

4.4 Wheel up height adjustment (Fig. 4.15 - Fig. 4.17)

The wheel up height needs to be set in order to ensure proper traction of the device.

1. Before beginning the height adjustment procedure:
   a. Ensure the device is now in the off position by pushing the Wheel Up/Down button and ensuring that the Wheel Up/Down button light is off. The R90 can only be completely powered off by removing the battery. The R90 will continue to drain the battery as long as it is plugged in.
   b. The device must be mounted to the receiver.
   c. The wheelchair user should be seated in the wheelchair.
   d. If using pneumatic tyres, the tyres should be set to their rated pressure.
2. Loosen, but do not remove, fasteners (A and B). (Fig. 4.15)
3. Adjust the manual height adjustment screw (C) using a 4mm hex wrench as shown. (Fig. 4.16)
4. Adjust the adjustment lead screw (C) such that wheel height gauge can slide under the drive wheel. The R90‘s drive wheel should be higher than the first step engraved with “GO“ and lower than the second step engraved with “NO GO“. This will position the drive wheel 6.3mm-8mm off of the ground as shown. (Fig. 4.17)
5. Once 6.3mm to 8mm off the ground, tighten again fasteners (A) and (B) to a torque setting of 6 Nm.
6. The wheel up height is now set.
7. Adjust set screw (C) to get correct gap between tyre and floor. Use spacer to achieve 6.3mm-8mm gap. (Fig 4.16)

⚠ DANGER!

The latch must be secured to the receiver. If not, the latch may become displaced from the receiver during operation. Failure to do so may result in improper function of the device, the wheelchair, and/or injury to the user.

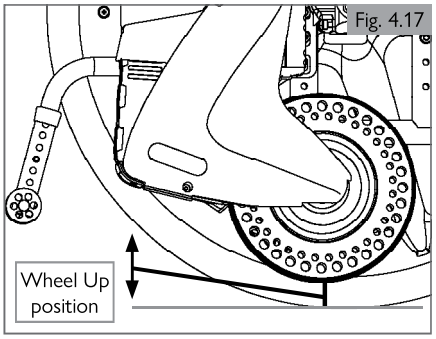

Fig. 4.17

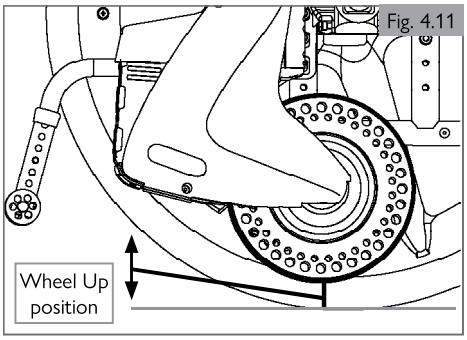

Fig. 4.11

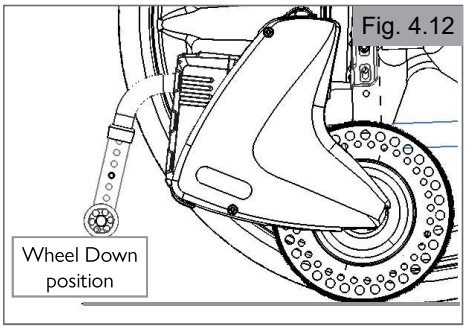

Fig. 4.12

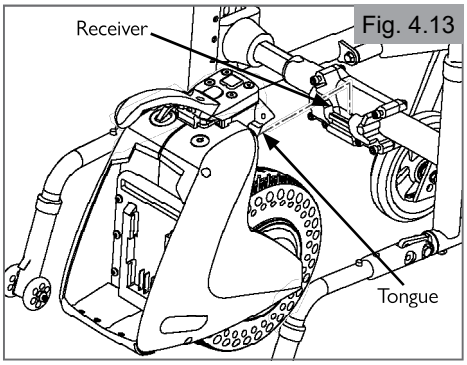

Fig. 4.13

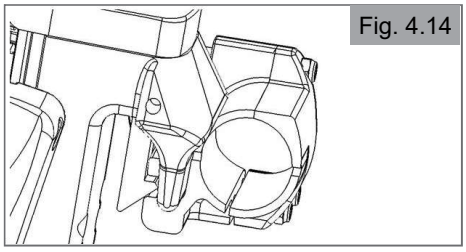
Fig. 4.14

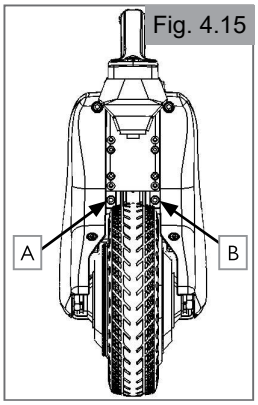

Fig. 4.15

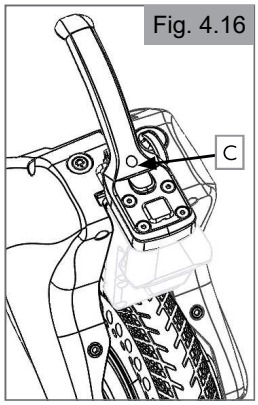

Fig. 4.16

4.5 Charging and Attaching the Battery

For proper charging and attachment of the battery, refer to section 6.0 Battery and Charger.

4.6 Mounting the Control Box

1. Attach the mounting hardware onto the wheelchair frame with a 5mm allen wrench.
2. To adjust the angle to the desired location, loosen the two small screws with a 2.5mm allen wrench. Once aligned to preferred angle, tighten the two screws.
3. Place the two AA batteries into the back of the control box.
4. Insert the control box into the wheelchair mount.
5. Ensure the control box can be easily accessed by the wheelchair user. Adjust the position on the frame if needed.

4.7 Setting up the Control Box (Fig. 4.18)

1. Upon delivery of the R90 device and control box option, proceed with placing the R90's battery. Then place the control box batteries. First, remove the control box battery compartment cover and then place two AA batteries into the control box. Upon placing the batteries in the control box, there will be two brief flashes of the blue LEDs by the battery indicator LED located at the top of the push button panel.
   a. For best bluetooth pairing, ensure that you are only working with one R90 unit at a time, and are at least 10 meters away from any other R90 units.
2. After the control box has powered on, the bluetooth signal will automatically begin searching for its mating bluetooth signal from the R90 unit, and will indicate this by signaling the left and right blue LEDs in an alternating pattern until the bluetooth connection is made. When the bluetooth connection successfully pairs to the R90, the blue LEDs will briefly flash three times.
   a. Once the control box has paired with the R90 device, it will remember the connection and automatically reconnect itself if the R90 is powered cycled.
   b. To pair the control box with a different R90 device, hold the stop and actuator wheel up/down button down for 5 seconds. It will now pair to the nearest R90 device that is powered on.
3. If the Control Box does not successfully pair with the R90 device, you may need to manually reset it and complete the bluetooth search again. To do this, press and hold down the stop button for 5 seconds. The control box will then begin searching to pair to the R90 device and will again show the blue LEDs in a left – right alternating pattern until it successfully pairs.
4. Once paired, the R90 is ready to be driven with the control box. Refer to section 5.0 Using the Device for information on operating the control box.

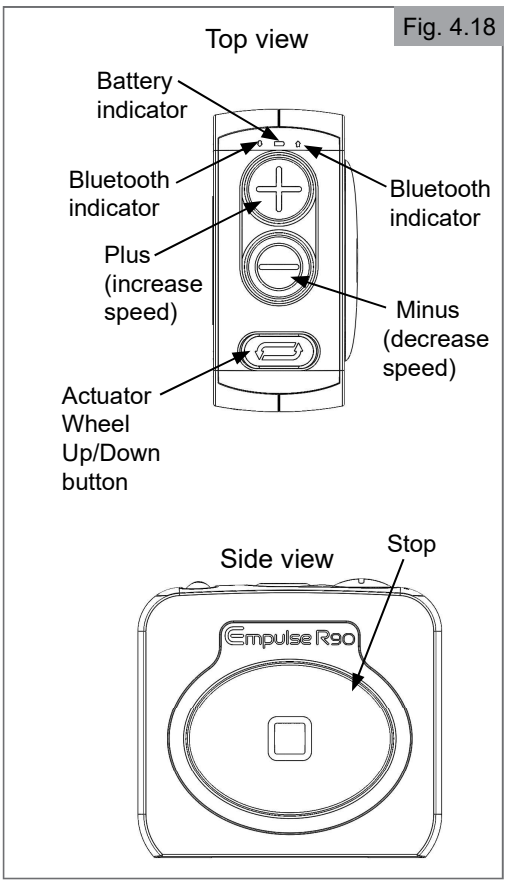

Fig. 4.18

4.8 Setting up the Sunrise Intelligence App

The app is required during the initial set up to optimize the drive performance of the R90 to the rider and their chair. Do not use the app while actively driving the R90.

1. Download the Sunrise Intelligence app from the Apple App Store or the Google Play Store.
2. Install a charged battery into the R90 and turn on the phone's Bluetooth.
3. Open the Sunrise Intelligence App. The user will be prompted to agree to the Terms of Use. The user must agree to continue.
4. Select Connect to scan for nearby devices. After scanning all available devices will be shown; select the user's R90.
5. The App will prompt the user to agree to the R90's Terms of Use. The user must agree to continue.
6. The app will prompt the rider to calibrate the R90 and enter the user's weight. These settings optimize the R90's performance for the user. For calibration, the R90 needs to be properly installed and attached to the rider's wheelchair. The wheelchair should have the wheel locks engaged and be set on level ground before the calibration is initiated. The R90 can always be re-calibrated through the app's settings page.
7. The top half of the home screen on the app will show the R90's current battery level as well as the speed, distance, and time for the last 9 sessions.
8. From the homepage the user can select Drive Profiles to switch between the two pre-set drive profiles. The indoor and outdoor drive profiles will optimize the R90 for their respective environments.
9. From the homepage the R90 drive wheel can be raised or lowered using the Wheel Up and Wheel Down buttons.
10. The Stop button will stop the R90 while driving.
11. The gear icon in the top right corner of the homepage allows access to the settings page. In the settings, the user weight and the calibration can be adjusted. In addition, the Consent to Liability can be reviewed.
12. The support page, which can be accessed by selecting Support from the homepage, provides links and access to support videos and the R90 Webpage.

4.9 Attachment and Removal of the R90 from the Receiver (Fig. 4.19)

With the receiver properly mounted to the wheelchair the device is now ready to be attached into the wheelchair mounted receiver.

⚠ WARNING!

- Before attaching the device into the receiver, ensure that the power to the device is off by checking the Wheel Up/Down button. The Wheel Up/Down button should be dark with no blue light around the edge.

4.10 Check after Set-up or Adjustment

After set-up and attachment, check to ensure that all fasteners are tightened to the specified torque setting and that no interferences exist between any of the components.

4.11 Additional Warnings

⚠ DANGER!

- See your health care provider and have them re-assess the basic fit and performance measurements, and adjust seating components when the device is added to an existing chair.
- Unauthorized modifications or use of parts not supplied or approved by Sunrise Medical may change the function of the device. This will void the warranty and may cause a safety hazard.
- The device may require adjustment by a Sunrise Medical authorized dealer when components of the wheelchair are changed. If the rear wheels of the wheelchair are altered, the device's traction may be affected and the device may need adjustment.
- When using the control box, remove the control box from the wheelchair receiver prior to transferring. Always ensure the device is powered off prior to transferring.

Many of the screws, bolts, and nuts on this device are special high-strength fasteners. Use of improper fasteners may cause your device to fail.

- ONLY use fasteners provided by a Sunrise Medical authorized dealer (or ones of the same type and strength, as indicated by the markings on the heads).
- Over- or under-tightened fasteners may fail or cause damage to device parts.
- If bolts or screws become loose, tighten them as soon as you can.

NOTE — For safety and optimum performance, do not reuse fasteners.

⚠ DANGER!

Anti-tip tubes can help keep your chair from tipping over backward in normal conditions. If your chair includes anti-tip tubes ensure you re-adjust them after adding the device to the chair.

- Sunrise Medical recommends the use of anti-tip tubes.
- Ensure anti-tip tubes are set and adjusted per the wheelchair manufacturer's recommendations.

If you fail to heed these warnings damage to your device, a fall, tip-over, or loss of control may occur and cause severe injury to yourself or others.

5.0. Using the device

⚠ **DANGER!**

- Check and adjust the settings regularly.
- Consult your Sunrise Medical authorized dealer to adjust the operational settings immediately if you notice any change in your ability to:
  - Control the device
  - Stopping and starting
  - Insufficient traction

5.1. Checking device before use

Perform the following daily check routine before driving:

⚠ **CAUTION!**

Checking Tire

If tire is overly worn and/or there is a loss of traction, adjust the set screw (Fig 4.15 and Fig 4.16) to lower the drive wheel until traction is achieved. If there is no more adjustment and there is still a loss of traction, then replacement of the device tire is recommended.

Checking Batteries

- Before using your device for the very first time, charge your batteries to full capacity. (Refer to Battery section.)
- Are the batteries sufficiently charged? The green lights on the battery indicator must be on.

⚠ **WARNING!**

Battery chargers are only intended to charge:

- The battery supplied for the device. Do not try and charge other batteries with the device charger.
- Do not use any battery other than the battery supplied with the device.
- Sunrise Medical can provide additional or replacement device batteries if required. Contact your Sunrise Medical authorized dealer if another battery is required.
- Refer to the battery and charger section for the proper care, use, and maintenance of the battery and charger.

Checking the Latch Release

Ensure that the latch release can be moved freely and locks in place when holding the latch hook.

Checking Clothing on Potential Entrapment

When operating the device, ensure that your clothing does not hamper the device (i.e. too long). Before use, always ensure your clothing or accessories do not come into contact with the wheels or other moving and/or rotating parts in which they could become entangled.

Checking Weather Condition

In winter, batteries have a reduced capacity. During a period of light frost, the capacity is roughly 75% of the normal capacity. At temperatures below -5°C this will be roughly 50%. This will reduce the total specified range.

5.2 Wheel Up/Down

1. Wheel Down	Device	Confirm device battery is in place	
		Press the Wheel Up/ Down button (located on top surface of the device)	Wheel Up/Down button blue LED light on device will illuminate when the wheel is down. When the wheel is completely down a long tone will sound to signal that the device is ready to be used.
	Control Box	Confirm device battery and control box battery are in place	
		Press the Actuator Wheel Up/Down button	Actuator Wheel Up/Down button blue LED light on device will illuminate when the wheel is down. When the wheel is completely down a long tone will sound to signal that the device is ready to be used.
2. Wheel Up	Device	Press the Wheel Up/ Down button	Blue LED light on device will not be lit. A short tone will sound to signal that the device is deactivated.
	Control Box	Press the Actuator Wheel Up/Down button	

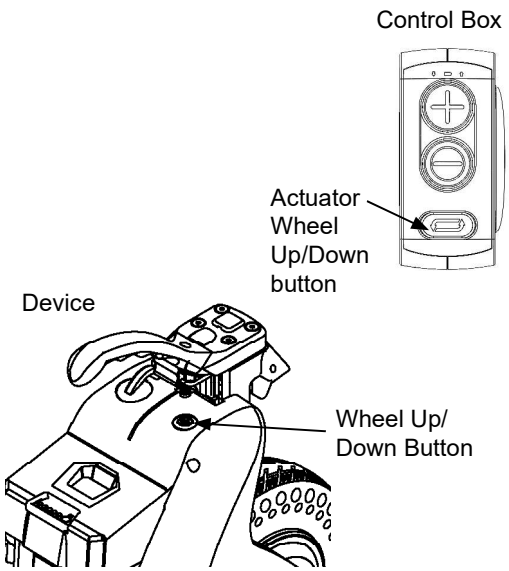

5.3 Operating the control box

Once paired, the R90 is ready to be driven with the control box.

Engaging the device wheel	To begin operation, press the actuator wheel up/down button on the control box to engage the device wheel to the ground.
Acceleration	Begin driving by first pressing the plus (increase speed) button once. The right blue LED will illuminate.
	Each press of the plus button will make the R90 drive faster. Do not hold the buttons down.
Deceleration	To slow down/decelerate, press the minus (decrease speed) button. The left blue LED button will illuminate.
Stopping	The stop button can be used to de-energize the motor at any time.
	The R90 does not have a brake. Once the motor is deenergized, the wheelchair must be brought to a stop by applying a braking force to the handrim, as would be done with a manual wheelchair without the R90 attached.
Wheel Up [1] (Actuator disengage)	Raises the device wheel. Ensure motor is de-energized. Press the actuator wheel up/down button to lift the R90 device wheel off the ground.
	Wheel up mode allows the wheelchair to be pushed, either by the occupant or by an attendant, without any activation or resistance from the device.
Sleep state	After 30 minutes of non-use the control box will enter a sleep state. To awaken the control box, press and hold the stop button for 5 seconds.
	To manually put the control box into sleep state, press and hold both the actuator and the stop buttons at the same time for 5 seconds.
Bluetooth connection	If the bluetooth connection is lost during use, the drive motor will de-energize and coast. Reconnect the control box by pressing and holding the stop button for 5 seconds.
Battery charging/ battery life	The red LED will illuminate when the control box batteries begin running low (indicating about 20% battery life remaining). Replace the AA batteries to avoid loss of function. Once batteries are replaced, the control box will begin the pairing process automatically.
	Recommended use of AA batteries with a nominal voltage of 1.5V; do not use rechargeable batteries which have less nominal voltage.

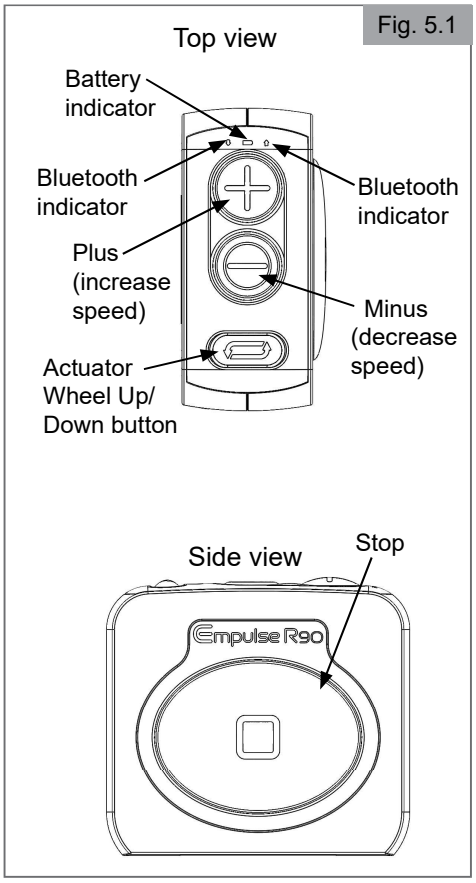

Fig. 5.1

[1] For more information on wheel up mode, see section 5.4.

5.4 Driving the R90

⚠ WARNING!

Please show the utmost consideration for the other traffic on the road.

⚠ DANGER!

- Remember that the last thing a car or truck driver expects to see is a device backing off the curb into the road.
- If in any doubt, do not risk crossing the road until you are certain that it is safe.
- Always cross the road as quickly as possible, there may be other traffic.
- Ensure that there are no objects in your path that could possibly become lodged in your device. This could cause the device to come to a sudden stop.
- Riding over drains or grids could cause the device wheel to become lodged, causing the chair to come to a sudden stop.

The device operates by responding to inputs from the control box. When using the control box, pressing the plus button will engage the drive motor without requiring you to propel.

Accelerating
To initiate motion, engage the plus button on the control box. The device has sixteen (16) electronic speed levels. At first press of the plus button, it will be set at the appropriate speed level. To go faster, additional press of the plus button will accelerate the wheelchair. The device will increase its electronic speed level accordingly.

⚠ CAUTION!

When using the control box, become familiar with how the device increases speed when pressing the plus button; allow a few seconds between pressing the plus button additional times to avoid reaching a speed faster than intended.

Maintaining Direction
While moving forward, it is important that you maintain control of the wheelchair through the wheelchair's handrims. The device may veer left or right due to the grade of the terrain or the set-up of the wheelchair. Maintaining the desired direction is done in the same manner as is used in operating the wheelchair without the device attached, by applying a push or stopping force to either the left or right handrim.

Turning
To turn while the device is operating requires either pushing on the left or right handrim, just as would be done without the device assisting.

⚠ DANGER!

Full speed turns should not be attempted. If you need to turn sharply you must reduce your speed prior to executing the turn by slowing down by using the control box. This is particularly important when traveling across or down a slope. Disregarding this advice could lead to your device tipping over which may result in damage to the device or injury to the user.

Decelerating
There are multiple ways to stop the device:
- Pressing the Wheel Up/Down button on the device will de-energize the motor.
- Pressing the minus button on the control box will reduce the speed of the wheelchair. Additional presses of the minus button will decrease the speed further with each press of the button.
- Pressing the stop button on the control box will de-energize the motor.
- Pressing the actuator button on the control box will de-energize the motor and lift the device into wheel up mode.

Stopping
The device does not have a brake. When the motor is de-energized, it will provide some slowing force, but it will not provide a braking force. Full stopping force must be provided by the user in order to come to a full stop.

Operating on an incline
- The device will provide assistive propulsion up an incline. It is best to be in motion prior to encountering the incline.
- When using the control box, it is recommended to engage the motor by pressing the plus button prior to encountering the incline.
- When climbing an incline be aware of the motor's traction. If your speed begins to slow or the drive wheel slips, provide manual assistance through the handrims. This will maintain power to the drive wheel and assist the rider up the incline.

Note: Refer to your manual wheelchair owner's manual for warnings regarding maximum allowable incline.

Operating on a decline
The device does not have a brake. The device will, however, provide some slowing force through the motor, but it will in most situations be insufficient to bring the chair to a stop, especially on a decline. Maintain control of the wheelchair through the handrims in order to come to a complete stop.

Operating rearward
The device does not provide any powered assistance in the rearward direction. However, it will provide a small amount of resistance moving rearward. To avoid this resistance, put the device into wheel up mode.

Wheel Up mode

- Wheel up mode is intended to be used when powered assistance is not required on a temporary basis, such as when operating in tight or confined spaces.
- To position the device in wheel up mode: use the Wheel Up/Down button on the device, or the actuator button on the control box. These actions will move the internal actuator in the device and lift it off the ground. This way, no power assist will be provided until the device is positioned back into wheel down mode.
- To reposition the device back into wheel down mode, simply press the device Wheel Up/Down button ON until the device drive wheel reengages the ground (wheel down mode). Additionally, you can press the actuator button on the control box.

⚠ **WARNING!**

Do not operate the R90 at high speeds in tight or confined spaces. Either reduce the speed, turn off the device, or position it into wheel up mode.

⚠ **WARNING!**

Pinch points exist between the device latch receiver and the folding axle tube and the wheelchair axle plates.

Adverse conditions

Please be aware that when operating the R90 in adverse conditions, e.g. on wet grass, mud, ice, snow, or other slippery surfaces, you may experience a reduction in the grip and traction of your device.

- It is recommended that you take extra precautions in these conditions, particularly on hills and slopes. The device could become unstable or skid causing possible injury.
- If you are in any doubt about the capabilities of your device on a slope, then do not attempt to drive up or down the slope/curb. Try to find an alternate route.
- When using the device take extra care with loose or long items of clothing. Moving parts, such as wheels, can be potentially dangerous or even fatal if clothing becomes entangled.

Gradients: ascents

⚠ **WARNING!**

- When going uphill, keep the chair moving.
- Steer by carefully pushing on either the left or right handrim making slight left and right adjustments as you go.
- If you have stopped on a hill, you should start slowly.
- If necessary, lean forward.
- Slopes greater than that recommended for your manual wheelchair should not be attempted. Curbs of greater than 12mm should not be ascended or descended unless the device is turned off. When traversing an obstacle of less than 12mm, or ascending or descending a slope, caution should be taken to properly shift your weight to ensure the device is properly balanced during the maneuver.

Gradients: descents

- On descents, it is important not to let the device accelerate beyond its normal level of ground speed.
- For steep inclines, it is recommended to power off the device.

⚠ **DANGER!**

- Proceed slowly down steep descents and stop if you feel anxious.
- If the chair is moving too fast, apply a stopping force to the handrims.
- Restart slowly and do not increase speed above what you are comfortable with.

⚠ **DANGER!**

- In certain circumstances your device could become unstable.
- Slopes greater than that recommended for your manual wheelchair should not be attempted. Curbs of greater than 12mm should not be ascended or descended unless the device is turned off. When traversing an obstacle of less than 12mm, or ascending or descending a slope, caution should be taken to properly shift your weight to ensure the device is properly balanced during the maneuver.
- To improve stability lean forward when driving uphill, with the seat and back in an upright position.
- Alternatively sit in an upright position when travelling in a forward, downhill direction and/or recline the seat backwards.
- When traveling on a slope, exceeding the maximum user weight of the device can cause the device to lose traction or respond abnormally. Do not exceed the weight limit when traveling on slopes.

6.0 Battery and charger

6.1 Introduction

The battery delivered with the product must only be used to drive the Empulse R90 from Sunrise Medical. No other components may be connected to it. Any other use requires the written authorisation of the manufacturer.
This operating manual only describes the use of the above-mentioned battery and corresponds to the state of the art at the time of print.
The manufacturer reserves the right to make changes resulting from further development of the mechanics, software or legal requirements. The manufacturer regards uses including the following as misuse of the battery:

- Use of the battery that contravenes the instructions and recommendations in this operating manual.
- Exceeding the technical limits laid down in this operating manual.
- Technical modifications to the battery.
- Changes to the software of the battery.
- Unauthorised attachments or use of the battery.
- The manufacturer shall not be liable for any damage caused by improper use of the battery.

Word	Definition
⚠DANGER!	Advice to the user of Potential Risk of serious injury or death if the advice is not followed
⚠WARNING!	Advice to the user of a risk of injury if the advice is not followed
⚠CAUTION!	Advice to user that potential damage to equipment may occur if the advice is not followed
NOTE:	General advice or best practice

6.2 Safety instructions for the battery

⚠ WARNING!

Read and observe the following safety instructions and precautions before activating the battery and before starting the charging process.

⚠ DANGER!

- Failure to comply with the safety precautions and instructions may damage the product or result in electric shock, fire and/or serious injuries.
- The lithium-ion battery contains chemical substances, which may cause hazardous reactions if the safety instructions specified here are disregarded.

⚠ CAUTION!

The manufacturer accepts no liability for damage resulting from non-compliance with these instructions.

Safety instructions and precautions on the use of the battery:

⚠ WARNING!

- Before using for the first time, the battery should be fully charged.
- The battery must only be used at temperatures within the range listed (see Section 8.0 Technical Specifications).
- The battery must not be exposed to heat (e.g. radiators) or fire. External heat exposure can lead to the battery exploding.
- In the (unlikely) event of the battery overheating or catching on fire, you must ensure that the battery does not come into contact with water or other liquids.
- If possible, charge the battery after every use.
- For use for any other purpose than the one intended by Sunrise Medical, you will require the written authorisation of the manufacturer.
- The battery must not be opened or taken apart. Improper opening or willful destruction of the battery involves the danger of serious injury. In addition, opening the battery voids any warranty claim.
- Never connect the battery contacts in the charging socket to metallic objects, or ensure that the contacts never come into contact with metallic objects (for example with metal filings).
- If the charging socket is dirty, clean it with a clean and dry cloth.
- Never immerse the battery in water.
- The useful life of the battery depends, among other things, on its storage location. Consequently, never leave the battery in hot locations for prolonged periods. In particular, use the boot of a car parked in the sun only for transport rather than as a storage location.
- Safety cut-outs
  In the event of a short circuit there are several safety systems built into your wheelchair to safeguard your electrical circuits.
  - The 30A fuses are integrated into the battery harnesses to protect the batteries and wiring.
  - To replace them contact your Sunrise Medical authorized dealer, who will also diagnose the original fault.

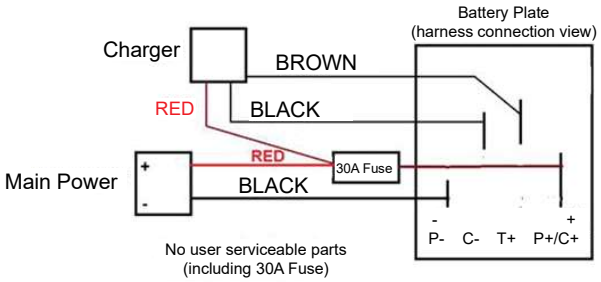

- The battery must not be subjected to mechanical impact. However, if this should happen, the battery must be checked by the manufacturer. Contact your servicing agent. You must not continue to use a damaged battery.
- If damaged or defective, the battery must be singled out and checked. Please contact your specialist dealer and discuss with them the next steps with regard to return and repair. The defective/damaged battery must not be used again or opened.
- Always ensure that the battery is kept clean and dry.
- Charge battery on a fire-and-heat-resistant underground. Do not place easily flammable or flammable objects close to the battery.
- Mishandling can lead to overheating, fire, or explosions.

Safety instructions and precautions on how to store the battery:

⚠ **WARNING!**

- Protect the battery immediately upon separating from the battery charger or motor. Never allow any moisture or foreign particles (e.g. metal fragments, small nails, filings or other conductive metals) to get into the battery.
- Do not expose the battery to moisture of any kind during storage (water, rainwater, snow, etc.).
- Before storing it, charge the battery and check its charge status every 3 months.
- Store the battery in a cool and dry location where it is safe from damage and unauthorised access.
- Battery storing conditions can be found in technical specification section.
- Avoid direct sunlight.
- When the battery is not in use, recharge it at least every 12 weeks to prevent damage.

Safety instructions and precautions on the charging process:

⚠ **WARNING!**

- Only charge the battery in a ventilated, dry and dust-free environment.
- Do not charge the battery in the presence or vicinity of flammable liquids or gases.
- Do not expose the battery to moisture of any kind during charging (water, rainwater, snow, etc.).
- Do not carry out the charging process in rooms where moisture may affect the battery.
- The battery must only be charged at temperatures between 0°C and 45°C.
- Only use the designated charger to charge the battery. Your specialist dealer can provide the relevant information.

⚠ **DANGER!**

- Using an unsuitable battery charger can lead to malfunction and result in the battery having a limited service life. There is also a danger of fire and explosion.
- When the charging process is complete, disconnect the charger from the mains socket first before disconnecting it from the battery.
- Ensure adequate air circulation as soon as the battery is charged. In principle, only charge the battery under supervision.
- Damaged batteries must not be recharged or used any further.
- Damaged battery chargers (damage to the plug, housing, cable) must not be used.

Safety information and precautions on how to transport and ship the battery:

⚠ **WARNING!**

- Lithium-ion cells are used in the battery. Transport and shipping of the battery are, therefore, subject to all applicable statutory requirements, which must be strictly observed. For instance, a defective battery must never be transported by plane.
- If your battery is defective, take it personally to your specialist dealer as shipping lithium-ion batteries by post or other carriers is subject to strict rules and regulations. Once again, we recommend that you contact your specialist dealer.
- As transport regulations may change annually, we strongly recommend that you consult your travel operator, airline, or shipping line before you set out on your trip in order to learn about the current applicable regulations. A defective battery must not be taken on a plane or put in your luggage.

NOTE:

- If your battery is fitted to the power assist device when being transported, relaxed transport regulations apply in accordance with UN3481.
- Make sure you keep the packaging container of the battery in case you need to transport it.
- Discuss transportation with your specialist dealer prior to shipping.

6.3. Notes for transportation in aeroplanes

Shipping lithium-ion batteries or taking them with you on aeroplanes is strictly regulated. The guidelines may vary depending on the airline. In all cases, contact your airline or carrier, before you transport or want to send a device on an aeroplane which operates on lithium-ion batteries.

⚠ WARNING!

- The battery of the Empulse R90 contains lithium-ion cells. For shipping or transportation, you must comply with the relevant legal guidelines.
- The guidelines for shipping lithium-ion batteries or transportation in an aeroplane may change. It is essential that you contact your airline or travel operator in order to obtain information about the current guidelines before you start a trip or plan shipping.
- Defective batteries cannot be transported in an aeroplane under any circumstances.
- If your battery is defective, please contact your dealer to find out how to proceed. In this case, special conditions apply for transporting hazardous products.
- In all cases switch the battery off for transportation and protect the contacts on the underside of the battery against short circuiting.

6.4. Battery types

The Empulse R90 utilizes Lithium ion batteries (2.5Ah or 5.0Ah):

- Li-ion 00 (Lithium ion) uses the specialized plug on the dual charging system when charging the batteries while connected to the device. A docking charger is available for battery charging off of the device.
- Do not use chargers other than those provided with your R90 batteries. Damage to the battery, and/or the charger unit can occur if using a charging unit other than what was provided by the manufacturer.

⚠ WARNING!

- Temperature
  - While travelling, if the internal temperature of the lithium ion battery becomes too high or too low, the battery will not provide power to the unit. The power assist function will not operate.
  - If the unit is in the drive position it will not operate. It may be necessary to manually remove the drive unit from the wheelchair.
  - When descending down a slope on the wheelchair, the drive motor, contrary to normal operation, generates electricity and charges the battery. Charging a lithium Ion battery in this way when its temperature is below 0°C or above 45°C will cause its deterioration. To protect the battery in these conditions, the device may stop itself.
- Charging:
  - The Lithium Ion battery uses the specialized plug on the dual charging system when charging the battery in the unit.
  - The battery can be removed to charge in the docking charger.
  - Do not use a charger other than the one provided with your specific battery.

6.5. Checking the battery

The battery capacity and charging progress is shown when the display key is pressed. The total capacity is shown by LED indicator lights. Each light represents about 20% of the total capacity of the battery. The display is active for approximately 3 seconds.

- What each battery level means
  LED's only light up when the display key is pressed. There are five LED lights on the battery display.
  - The R90 Wheel Up/Down button will pulse when the device charger is connected and will not allow drive while the device charger is connected.
  - If the battery LED's do not respond when the display key is pressed, the battery should be connected to a charger. This can "wake up" the battery management system. If there is still no response after charging for at least 2 hours, the battery is defective.

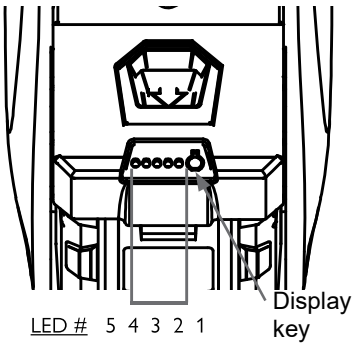

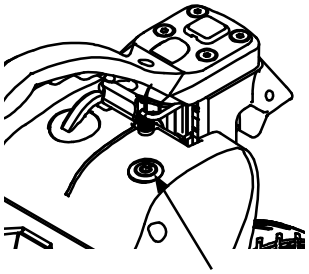

STATUS/ VOLTAGE	Battery Capacity	LED 1 Flashing Red	LED 1 Solid Red	LED 2 Solid Yellow	LED 3 Solid Orange	LED 4 Solid Green	LED 5 Solid Green
Active		any lights					
13-33.9V	< 10%	☑					
34-34.9V	10% - 20%		☑				
35-35.9V	20% - 40%		☑	☑			
36-36.9V	40% - 60%		☑	☑	☑		
37-38.4V	60% - 80%		☑	☑	☑	☑	
38.5-41.8V	80% - 100%		☑	☑	☑	☑	☑

- Lithium Ion battery life:
  - When the battery can no longer be charged, the battery indicator lamp no longer lights.
  - Recycle battery. Do not dispose of in bodies of water or sewer systems. Dispose of in accordance with local, state, and federal regulations.

6.6 Low battery levels

⚠ **WARNING!**

- ALWAYS be aware of the battery life. Check it frequently. It is best to carry a spare battery when taking prolonged rides. When changing to a replacement battery:
  - First get your wheelchair to a safe place. Turn the Wheel Up/Down button off and switch to the replacement battery. If you have no replacement battery with you, leave the Wheel Up/Down button turned off while driving.
  - If you cannot change the battery on your own, an attendant must be present.

6.7. Detaching the battery

- The battery can be removed for charging or as protection against theft.
- The battery can be removed as follows:
  - Ensure the wheelchair is stopped and on level ground.
  - Turn off the device.
  - Disconnect the battery by pressing the battery release button and pulling it out of the cradle.

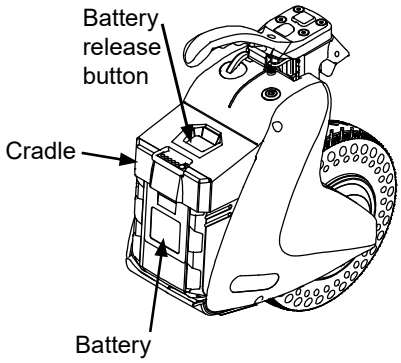

6.8. Charging the battery

Fully charge the battery before its first use. The battery can be charged at any capacity without adversely impacting its service life.

Safety information and precautions on the device charger and docking charger:

⚠ **WARNING!**

- Before starting the charging process, read and follow all instructions and precautions enclosed with the charger and the following precautions and safety information.
- Only use the designated charger to charge the battery. Your specialist dealer can provide the relevant information.
- Do not expose the charger to moisture of any kind during charging (water, rain water, snow, etc.).
- Do not carry out the charging process in rooms where moisture may affect the charger.
- Be aware of condensation. If the charger is brought from a cold room into a warm room, condensation may form. In this case, refrain from using the charger until all condensation has dissipated. Please note that this may take several hours.
- Never carry the charger by its power cable or the charger cable.
- Never tug at the power cable to disconnect the charger from the mains socket.
- Never subject cable and plug to any pressure. Overstretching or bending the cable, pinching a cable between a wall and a window frame, or placing heavy objects on a cable or a plug may result in electric shock or fire.
- Lay the power cable and the attached charging cable so that nobody can step on it or trip over it and so both cables are protected.
- Never attempt to disassemble or modify the charger.
- Do not cover the charger during the charging process or place any objects on top of the device.
- Never connect the terminals of the charging plug with any metal objects.
- Ensure that the plug is firmly inserted in the socket.
- Never touch plugs with wet hands.
- The charging process ends automatically as soon as the battery is fully charged. This avoids overcharging.
- Do not leave the charger connected to the mains socket any longer than necessary.
- When the charging process is complete, disconnect the charger from the mains socket first before disconnecting it from the battery.
- Before using the device, always check the charge status of the battery.
- The battery should be fully charged prior to use in order to provide motorised support at all times.
- The battery may only be charged in a dry room at temperatures between 0° and 45°C.
- Charge the battery fully before longer periods of storage, eg, before a winter break and re-charge regularly (approximately every 12 weeks).
- Do not use the plug of the charger and/or the mains plug if they are wet or dirty. Before inserting it, clean the plug using a dry cloth.

Device Charger: charging

Note: Charging can be done on-board or table top.
Important - If charging from the travel bag, ensure that the charge cord is not tangled.

1. Open the battery charge port connector cover.
2. Connect the magnetic charge cord to the device charging port. The charge light should come on. Charging can take 1 hour for 2.5Ah battery and 2 hours for 5.0Ah battery.
3. The progress of charging is shown on the battery capacity display. This display serves as an indicator for the progress.
4. When charging is complete, the charging light and the battery capacity display will shut off.
5. After charging is complete, replace the battery's connector cover, then secure the battery charge port connector cover.

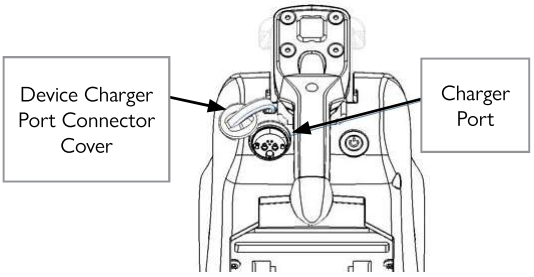

Device Charger: troubleshooting

- Automatic charging mode (ACH) – Device Charger: Once connected to the e-mobility device the charger will automatically start charging as long as:
  - The voltage of the battery is between 20V-42.5V, and
  - The internal battery cells are at normal temperature range. (No measurement of this temperature is possible)
- Manual charging mode (MCH) - Device Charger (press “Refresh”): If the battery has been in long-term storage, or the battery is allowed to be depleted below 20V, or the battery has a fault, the automatic charging mode may fail to start. In this case the manual charging mode will be needed.
  - After connecting the charger to the e-mobility device press the “Refresh” button.
  - If the battery voltage is below 20V and the internal battery cells are at normal temperature the charging LED will be illuminated and the charger will now start. Allow the process to complete.
  - If the battery temperature is not normal the charger will trip.
    1. Disconnect the charger and wait 5-10 minutes to allow the internal battery cells to cool.
    2. Reconnect the charger; do not press the „Refresh” button. If the battery temperature is now normal, the charging LED will be illuminated and the charger will now start.
    3. If the charging LED does not illuminate, the battery is defective and must be replaced.

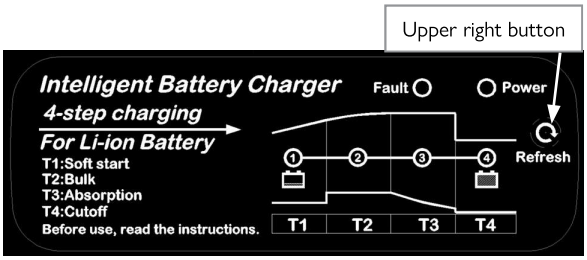

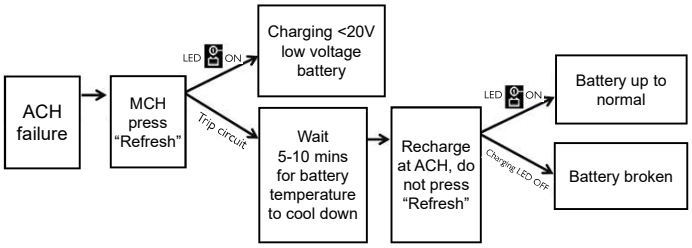

Device Charger: important safety instructions

⚠ WARNING!

The charger for the Empulse R90 is a very sensitive piece of equipment. Improper use can cause damage or in certain circumstances lead to burns or fire.

- When charging always use the charger supplied.
- Always charge on a level surface. After use do not keep it plugged into the power outlet.
- Keep the charging unit out of reach of children and anyone who is not familiar with it.
- Do not use chargers that have a damaged cord, or chargers that have been dropped.
- There is a temperature detection wire on the output of the charger. Do not mistakenly connect to the battery+ to avoid burning the charger.
- This charger is designed for Sunrise Medical R90 batteries, with a temperature detection wire, through which the charging and battery over-temperature protection can be automatically started.
- For some other battery BMS, the charging may not detect the battery voltage, and the charger may not automatically start output charging. At this time, the charger is in standby mode and must be forced to output through the upper right refresh button on the on-board charger.
- The charger design is focused on dust-proof and water-proof (IP65).
- Please do not use it in direct sunlight or high temperature environment (outside the range listed in Section 8.0 Technical Specifications).
- There is more set time for each stage of the machine. Excessive battery capacity may cause faulty judgment. It does not support charging batteries that the capacity is more than 75Ah.

Docking Charger: charging

1. Plug the battery charger into the proper AC voltage source. Charging red light will flash red.
2. Insert the battery cartridge into charger cradle and slide along track until it clicks into place.
3. When the battery cartridge is inserted, charging will begin. Charging green light will flash green during charging.
4. When charging is complete, the charging green light will stay on (solid green).
5. Charging time varies by temperature that battery cartridge is charged at and conditions of the battery cartridge, such as battery cartridge which is new or has not been used for a long period of time.
6. After charging a Li-ion battery, remove it from the charger and unplug the charger.

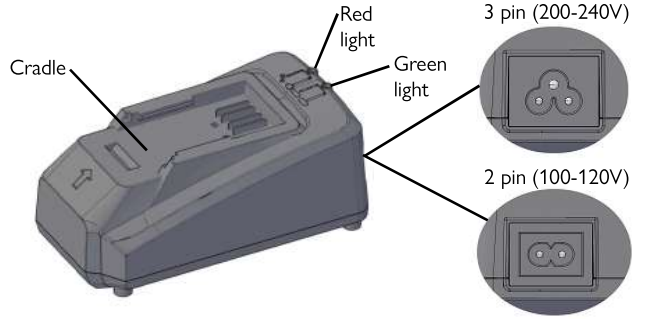

Red Charging Light	Fault: flashing red
	Standby: solid red
Green Charging Light	Charging: flashing green
	Full charge: solid green

Docking Charger: maintenance

- Visually inspect both sides of charger for wear or damage every three months.
- To maintain product SAFETY and RELIABILITY, repairs, any other maintenance, or adjustment should be performed by Sunrise Service Centers, always using Sunrise replacement parts.

Docking Charger: important safety instructions

⚠ **WARNING!**

The following instructions contain important safety and operating instructions for battery charger.

- Before using battery charger, read all instructions and cautionary markings on battery charger, battery, and product using battery.
- CAUTION – To reduce risk of injury, charge only Sunrise R90 rechargeable batteries. Other types of batteries may burst causing personal injury and damage.
- Non-rechargeable batteries cannot be charged with this battery charger.
- Use a power source with the voltage specified on the nameplate of the charger.
- Do not charge battery cartridge in presence of flammable liquids or gases.
- Do not expose charger to rain or snow.
- Never carry charger by cord or yank it to disconnect from receptacle.
- After charging or before attempting any maintenance or cleaning, unplug the charger from the power source. Pull by plug rather than cord whenever disconnecting charger.
- Ensure cord is located so that it will not be stepped on, tripped over, or otherwise subjected to damage or stress.
- Do not operate charger with damaged cord or plug — replace them immediately.
- Do not operate or disassemble charger if it has received a sharp blow, been dropped, or otherwise damaged in any way; take it to a qualified service technician. Incorrect use or reassembly may result in a risk of electric shock or fire.
- The battery charger is not intended for use by young children or infirm persons without supervision.
- Young children should be supervised to ensure that they do not play with the battery charger.
- Do not charge battery cartridge when temperature is outside the range listed in Section 8.0 Technical Specifications.
- Do not attempt to use a step-up transformer, an engine generator or DC power receptacle.
- Do not allow anything to cover or clog the charger vents.
- The battery charger is for charging battery cartridge. Never use it for other purposes or for other manufacturer's batteries.
- If charging light flashes in red color, battery condition is as below and charging may not start.
  - Battery cartridge from just-operated tool or battery cartridge that has been left in a location exposed to direct sunlight for a long time.
  - Battery cartridge that has been left for a long time in a location exposed to cold air.
- Charging will begin after the battery cartridge temperature reaches the degree at which charging is possible.
- Do not use if the terminals on the charger or battery cartridge are clogged with dust or the battery cartridge is worn out or damaged.

6.9 Battery warranty

Battery warranties are subject to periods set by the manufacturers. However, most of these warranties are subject to a wear and tear clause, and if you genuinely wear out your batteries in 24 months, it will not be possible to obtain a replacement under warranty.

7.1 Tyre maintenance and replacement

Note: This installation requires R90 Tire Replacement Tool P/N 257350 (available on E-Parts).

A. Removing the tyre:

1. Use a 4mm allen wrench to loosen/remove the shroud hardware (A) for ease of disassembly.
2. Remove the motor (F): use a slim 19mm wrench to remove the motor nuts (B). (Fig 7.1)
3. Pull the motor out of the slot and unplug the motor connector (C). (Fig 7.2)
4. Remove the collar screws (D) that hold the collar using a 3mm Allen wrench. (Fig 7.3)
5. Lay the motor to the side with the collar pointing downwards.
6. Push the tyre (G) downwards until it is removed from the motor (F). The collar (E) will also slip out.

(continued on next page)

Fig. 7.1

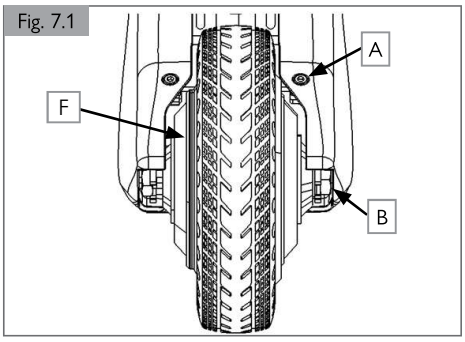

Fig. 7.2

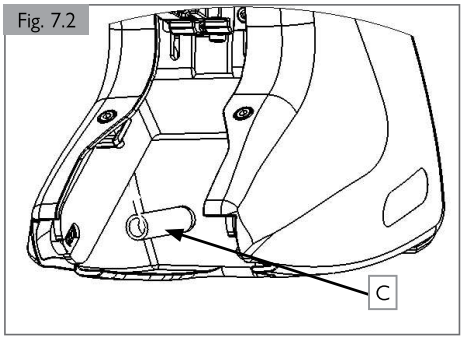

Fig. 7.3

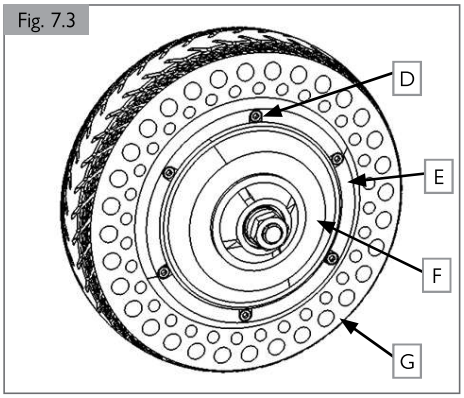

7.1 Tyre maintenance and replacement (continued)

B. Replacing the tyre:

1. Insert seven M6 bolts (H) onto the bottom plate of the R90 tire replacement tool P/N 257350 (available on E-Parts) (I). (Fig 7.4)
2. Put the motor (F) on top of the bottom clamp (I). Ensure that the motor connector (K) runs underneath the clamp (I). (Fig 7.4)
3. Place the tyre installation cone (J) on top of the motor (F). (Fig 7.4)
4. Place the tyre (M) on top of the cone, then place the top clamp (L) on top of the tyre (M). Align both of the clamps' and tyres' holes. (Fig 7.5)
5. Insert the 4 M8 bolts (N) with a washer (O) on top and bottom of the bolt into the slots from the top of the clamp and secure them with M8 Hex nuts (P) from the bottom clamp. (Fig 7.5)
6. Use two 13mm wrench to secure the M8 bolts (N) and nuts (P) in small increments by using a star pattern, 5-6 turns per increment. Stop the process once the tyre reaches the motor wall. (Fig 7.5)
7. Remove the top and bottom clamps.
8. Use a flat screwdriver to pry out the tyre installation cone.
9. Align the collar and attach it to the motor with three M4x25 bolts (Q). (Fig 7.6)
10. Attach three M4x16 bolts in the remaining holes (R) and torque them to 4.8 Nm.
11. Replace the M4x25 bolts (Q) with M4x16 bolts and torque them to 4.8 Nm.
12. Attach the motor connector (K) by aligning the arrows on each connector and pushing them together. (Fig 7.7)
13. Route the wire to fit between the fork and shroud. Then, orient the motor shaft to align with the fork slot and slide it on.
14. Ensure the key washer faces the slot opening. The key washer (S) is always on the opening slot of the fork (Fig 7.8). Push the motor shaft all the way into the fork slot and tighten the 19mm hex nuts.
15. If loosened/removed earlier, tighten/insert the shroud hardware.

Fig. 7.4

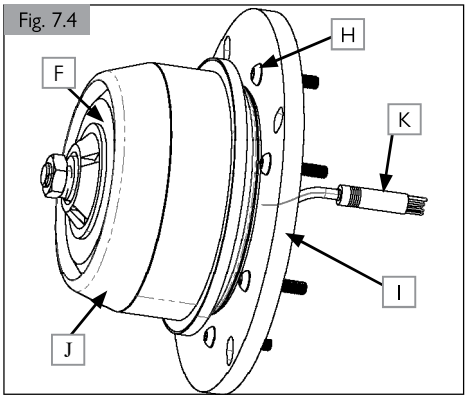

Fig. 7.5

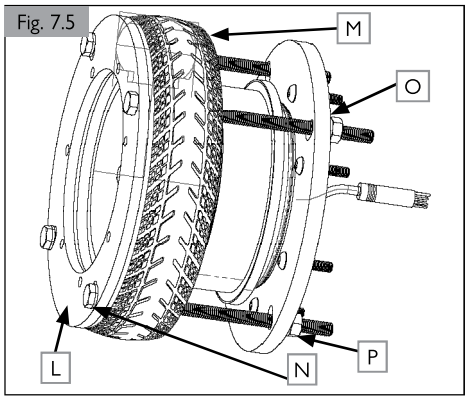

Fig. 7.6

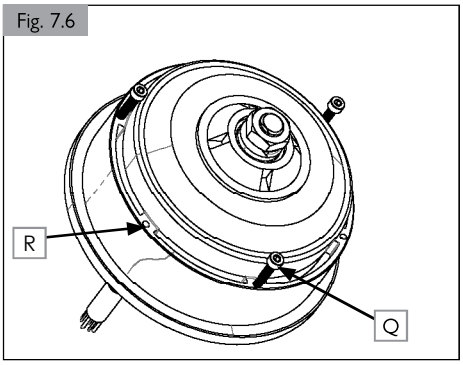

Fig. 7.7

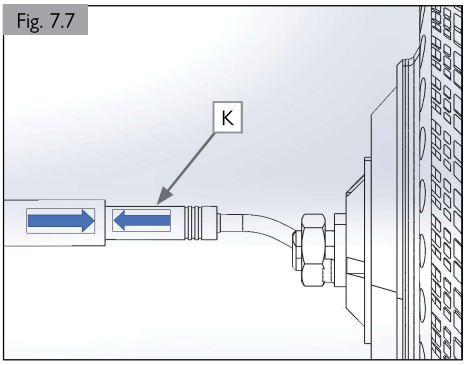

Fig. 7.8

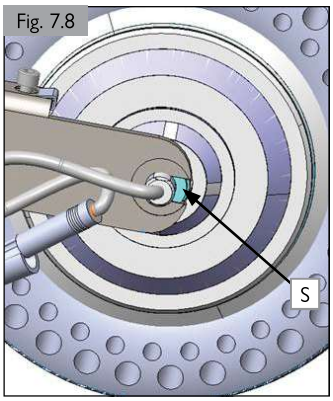

7.2 Regular maintenance

Your power assist device is subject to high levels of stress when being used, and requires regular checks in order to guarantee your safety.

⚠ DANGER!

Carry out the visual inspections/maintenance as described below regularly, at least every 4 weeks, and ideally before you set off each time:

- Make sure that all screws and fasteners are secure.
- Visual inspection of the wheelchair frame and back tubes for damage (e.g. cracks, deformation, etc.).
- Check tyres (tread, cracks, damages) and replace if needed.
- Check the spoke tension and the rim and hub of all wheels (wheelchair wheels as well) for damage.
- Check all cable and electrical connectors.

Weekly checks

Perform the weekly check routine before driving as described below.

Checking connectors and cables

- Ensure that all connectors are securely mated.
- Check the condition of all cables and connectors for damage.

General weekly checks

- Check tyre to ensure not overly worn.
- Check device for foreign objects and/or obstructions.
- Ensure the latch release functions properly.

Quarterly checks

Perform the quarterly check routine before driving as described below.

- Check to ensure the wheelchair receiver mounted on the camber tube or the folding axle tube are correctly positioned relative to the wheelchair.
- Check chair for any missing or loose nuts, bolts, and / or fasteners. Contact a Sunrise Medical authorized dealer if found.
- Check device for any broken components, unusual wear, or other indicators of excessive wear. Discontinue use if damage is found and contact a Sunrise Medical authorized dealer.

⚠ WARNING!

- If you are in any doubt about the performance requirements of your device contact your Sunrise Medical authorized dealer.
- After performing any maintenance or repairs on the device you must ensure that it is functioning correctly before it is used.
- A complete inspection, safety check, and service should be made by a Sunrise Medical authorized dealer at least once per year.
- All fasteners must be replaced like for like using the correct length, tensile strength, and materials.
- When replacing self-locking nuts, or nuts/studs secured with a thread locking solution, ensure that a suitable thread locking solution is reapplied to the fastener.
- Ensure that any contamination, such as fluff, hair, etc. is removed from the device. Such contamination may affect tongue latching into receiver.
- Do not reuse fasteners.

	End User / Caregiver			
Maintenance and Inspection Schedule	**Daily***	**Weekly**	**Quarterly***	**Annually**
Daily Check routine as described in Section 5.1	☑			
Weekly Check routine as described in Section 7.2		☑		
Quarterly Check routine as described in Section 7.2			☑	
Complete inspection, safety check, and service should be made by a Sunrise Medical authorized dealer				☑

* Daily = Before each use of the device. Quarterly = Every three (3) months.

If fasteners are found to be loose a Sunrise Medical authorized dealer should tighten the fastener to the torque setting per size detailed below, unless stated otherwise in all appropriate owner's manuals or instruction sheets (if applicable).

- M5 Fasteners = 5.8 Nm
- M4 Fasteners = 2.2 Nm
- M3 Fasteners = 1.0 Nm
- M2 Fasteners = 0.9 Nm

7.3 Troubleshooting

If the device is not working as it should, check the following points:

1. Check whether the batteries are charged.
2. Check that the battery is properly seated in the device.
3. Check that the wheel is down and engaged with the ground.
4. Remove and reinsert the battery.
5. Check whether the battery plugs are all securely in place.
6. Check whether app software is up to date.

If the problem has not been resolved:
Contact your Sunrise Medical authorized dealer.

8.0 Technical Specifications

General data	
Operating Voltage	36 Volt
Range of action*	Up to 15.7 km or 31.4 km
Max. Speed options	0 - 8.9 kph or 0-6 kph
Dynamic stability (rated slope)	Up to 11% (6°)
Device temperature**	Tested according to ISO 7176-9 which allows operation temperature of -20 to +50 °C and a storage temperature of -40 to +65°C
Flammability standards	Tested according to EN 12184
Max. user weight/Load	125 kg
Total weight	6.6 kg or 7.1 kg
Weight of drive unit	5.9 kg
Unit serial number	Example: E90XXXXXX or E90EXXXXXX
Product dimensions	Max. length 312mm x max width 150mm x max height 395-420mm

Motor data	
Rated voltage	36 Volt
Maximum current	15A
Power	250 W
Maximum torque	22Nm
Protection Rating	ISO-7176-9
Serial number	Example: Laserprint SOF2011FD0007 serial number 0007
Wheel size	197mm
Motor noise	Max. 62 +/-5 dbA
Motor temperature (normal operation)	Max. 41°C
Warranty	1 year

Battery data	
Battery type	Lithium-ion
Rated voltage	36 Volt
Capacity	2.5 Ah or 5.0 Ah
Electrical power	90 Wh or 180 Wh
Discharge current	25A (2 sec) or 30A (2 sec); 12.5A or 25A
Charging time	1 hour (for 2.5A) or 2 hours (for 5.0 A)
Temperature in normal operation	Max. 41°C
Charging temperature range	0° - 45°C
Operating temperature (discharging)**	-20° to 50°C
Storage temperature range	-20° to 50°C (weekly); -20° to 35°C (6 months)
Maximum number of charging cycles	300
Protection Rating	ISO-7176-9
Serial number	Example: Laserprint S2021JUN0001 or 2111B25S0001
Warranty	6 months
Display	State of charge
Functions	N/A
Fuse	Built in short circuit protection
UN test certificate	Present
Weight of battery pack:	0.7 kg or 1.2 kg

* The range depends on terrain and the prevailing driving conditions. The specified max range of action is valid for optimum travel conditions (level terrain, a newly recharged battery pack, ambient temperature of 20 °C, smooth travel, etc.). At lower temperatures, the range of the power assist device may be lower than the range specified.

** Remove the battery when the unit is not in use. Store the device and batteries seperately according to the above specifications.

8.0 Technical Specifications

Battery Charger	
Input	100-120V or 220-240V AC
End-of-charge voltage	42 Volt
Charging current	2.7A (device charger) or 3.0A (docking charger)
Protection Rating	IP65 or IP4
Fuse	None
Serial number	Example: Sticker label 2201DVC0001 or 2201DKC0001
Surface temperature	Up to 51°C
Warranty	6 months
Controller	
Rated voltage	36 Volt
Max. Current	15A
Nominal current	50 mA
Protection Rating	IP54
Control Box	
Batteries	Two AA
Battery lifetime	4 months (under normal operation)
Functions	Forced sleep, forget current paired device, and soft reset
+/- Button	Accelerating / Decelerating
Top circle arrow button	Lower and lift the R90 unit or press and hold 5 seconds to put the control box into sleep state
Side oval button	Stop the R90 unit or reset/awaken the control box by press and hold it for 5 seconds
LED indication	When scanning for a R90, a single blink every 5-7 seconds
	3 blinks when connection established
	3 second blink when entering sleep mode
	2 blinks when wakes up from sleep
	1 second blink when forced soft reset
	When Faster button pressed, left LED blinks for 2 seconds
	When Slower button pressed, right LED blinks for 2 seconds
	Red LED blinks when battery is low
Bluetooth connection	BT 5.0
Protection rating	ISO-7176-9
Mounting system	Left or Right orientation
Side Frame tubes size	Ø23mm / Ø28.6mm / Ø35mm
Height	Short plate (60mm), Tall plate (110mm)
Angle position	360° Angle set (in 22.5° increments)

9.0 Notes on storage

Battery:

- Protect the battery immediately upon separating from the battery charger or motor. Never allow any moisture or foreign particles (e.g. metal fragments, small nails, filings or other conductive metals) to get into the battery.
- Avoid storage in humid areas to prevent corrosion on the plug contacts.
- Do not expose the battery to moisture of any kind during storage (water, rainwater, snow, etc.).
- Before storing it, charge the battery and check its charge status every 3 months.
- Store the battery in a cool and dry location where it is safe from damage and unauthorised access.
- Do not keep your battery in places where the temperature is outside the range listed in Section 8.0 Technical Specifications.
- Avoid direct sunlight.
- When the battery is not in use, recharge it at least every 12 weeks to prevent damage.

Power assist device:

- Store the power assist device in a dry place, protected from rain and snow.
- Cover the power assist device during long-term storage in order to protect it from dust.
- Do not store the power device at temperatures outside the range listed in Section 8.0 Technical Specifications.
- After a long period of storage, check the condition of the tyre before setting off.

10.0 Cleaning and hygiene

Cleaning:

- The power assist device should be cleaned regularly and after each bigger journey with commercially available, household cleaning agents and a little bit of water.
- The display, battery and all other electronic components may only be cleaned by wiping with a damp (not wet) cloth.
- The drive wheel can be cleaned with a soft sponge or a soft brush.

⚠ CAUTION!

- Never use steam or high pressure to clean the device.
- Never use any abrasive cleaning agents or aggressive, acidic cleaners.
- Make sure that water will not get into contact with the electrical connectors.

Hygiene when being reused:

- Prior to the product being re-used, it must be carefully prepared. All surfaces which come into contact with the user must be treated with a disinfection spray.
- To do this, you must use a disinfectant as authorised/ recommended in your country, for rapid alcohol-based disinfection for medical products and medical devices, which must be disinfected quickly.
- Please be aware of the manufacturer’s instructions for the disinfectant you are using.
- In general, a complete disinfection cannot be guaranteed on seams. We therefore recommend that you dispose of seat and back slings to avoid micro-bacterial contamination with active agents according to your local infection protection law.

11.0 Disposal and recycling

NOTE: If the power assist device has been made available to you as part of a charity or medical loans scheme, then it may not belong to you. If it is no longer required, then follow the instructions to return it as given by the organisation that made the power assist device available to you.

Electrical and electronic equipment need to be disposed of separately to general household waste at specific state-provided locations. The correct disposal and separate collection of used appliances serves to prevent potential damage to health and the environment. It is a requirement for the re-utilisation and recycling of used electrical and electronic equipment.

Detailed information on the disposal of your used equipment can be obtained from your local authority, your waste disposal service, the specialist dealer from which you purchased the product, or your sales contact.

This information only applies to equipment which is installed and sold in the countries of the European Union and which is subject to the European directive 2002/96/EC. In countries outside of the European Union, deviating conditions apply to the disposal of electrical and electronic waste.

Materials Used:

In the following section, there is a description of the materials used on the power assist device, in view of the disposal or recycling of the power assist device and its packaging. There may also be special local regulations in force with regard to disposal or recycling, these must be taken into account when disposing of your power assist device. (This can include the cleaning or decontamination of the power assist device prior to disposal).

Aluminium:	Clamp, motor hub, and latch assembly block
Steel:	Fork and motor
Plastic:	Housing, plug, battery plate, skid plate, PCB board, tyre, and handle
Packaging:	Cardboard
Battery:	Lithium-ion battery (hazardous product)

Please see battery section for more detailed information.

12.0 Nameplate

The nameplate is located on the device as well as on a label in the owner's manual. The nameplate indicates the exact model designation and other technical specifications. Please provide the following pieces of information whenever you have to order replacement parts or to file a claim:

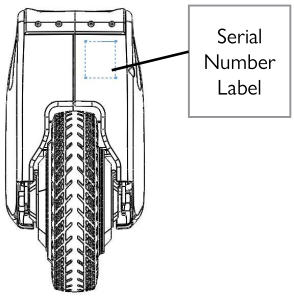

As we are committed to continually improving the construction of our wheelchairs and power assist devices, product specifications may vary slightly from the examples illustrated. All weight/dimensions and performance data is approximate and is provided solely for guidance.

CE All power assist devices must be used in accordance with the manufacturer's guidelines.

Sunrise Medical (US) LLC
North American Headquarters
12002 Volunteer Blvd.
Mount Juliet, TN 37122, USA
Phone: +1 1 800 333 4000
Fax: +1 1 800 300 7502
www. SunriseMedical.com

Type:	Product Name/SKU Number.
max X°	Maximum safe slope, depends on wheelchair/ add-on bike setting, posture and physical capabilities of the user.
XXX kg	Load Maximum
CE	CE Mark
UK CA	UKCA Mark
	Consult instructions for use
X km/h	Max speed
XX Volt	Electrical voltage / V=Volt.
XXX Watt	Motor performance
Li-ion	Cells contain lithium
	Must not be disposed of as household waste
SN	Serial number
MD	This symbol means Medical Device
	Manufacturer's address
XXXX-XX-XX	Date of manufacture
EC REP	European Authorised Representative
UK RP	UK Responsible Person
CH REP	Swiss Representative's address
	Importer's address
	Symbol for wheelchair not intended to be used as a seat in a motor vehicle.

ISO 7010-M002

Instruction manual/booklet must be read!
(Blue Icon)

Sunrise Medical S.r.l.
Via Riva, 20 – Montale
29122 Piacenza
Italia
Tel.: +39 0523 573111
www.SunriseMedical.it

Sunrise Medical AG
CH REP
Erlenauweg 17
CH-3110 Münsingen
Schweiz/Suisse/Svizzera
Tel +41 (0)31 958 3838
www.SunriseMedical.ch
CH

Sunrise Medical AS
Delitoppen 3
1540 Vestby
Norge
Telefon: +47 66 96 38 00
post@sunrisemedical.no
www.SunriseMedical.no

Sunrise Medical AB
Neongatan 5
431 53 Mölndal
Sweden
Tel.: +46 (0)31 748 37 00
post@sunrisemedical.se
www.SunriseMedical.se

MEDICCO s.r.o.
H – Park, Heršpická 1013/11d,
639 00 Brno
Czech Republic
Tel.: (+420) 547 250 955
Fax: (+420) 547 250 956
www.medicco.cz
info@medicco.cz
Bezplatná linka 800 900 809

Sunrise Medical Aps
Mårkærvej 5-9
2630 Taastrup
Denmark
+45 70 22 43 49
info@sunrisemedical.dk
www.SunriseMedical.dk

Sunrise Medical Australia
11 Daniel Street
Wetherill Park NSW 2164
Australia
Ph: +61 2 9678 6600
Email: enquiries@sunrisemedical.com.au
www.SunriseMedical.com.au

Sunrise Medical (US) LLC
North American Headquarters
12002 Volunteer Blvd.
Mount Juliet, TN 37122, USA
(800) 333-4000
(800) 300-7502
www.SunriseMedical.com

Sunrise Medical GmbH
EC REP
Kahlbachring 2-4
D-69254 Malsch
Deutschland
Tel.: +49 (0) 7253/980-0
Fax: +49 (0) 7253/980-222
www.SunriseMedical.de
EU

Sunrise Medical Ltd.
UK RP
Thorns Road
Brierley Hill
West Midlands
DY5 2LD
England
Phone: 0845 605 66 88
Fax: 0845 605 66 89
www.SunriseMedical.co.uk
UK

Sunrise Medical S.L.
Polígono Bakiola, 41
48498 Arrankudiaga – Vizcaya
España
Tel.: +34 (0) 902142434
Fax: +34 (0) 946481575
www.SunriseMedical.es

Sunrise Medical Poland
Sp. z o.o.
ul. Elektronowa 6,
94-103 Łódź
Polska
Telefon: + 48 42 275 83 38
Fax: + 48 42 209 35 23
E-mail: pl@sunrisemedical.de
www.Sunrise-Medical.pl

Sunrise Medical B.V.
Defensiedok 20
3433 NE Nieuwegein
The Netherlands
T: +31 (0)30 – 60 82 100
F: +31 (0)30 – 60 55 880
E: info@sunrisemedical.nl
www.SunriseMedical.nl

Sunrise Medical HCM B.V.
Vossenbeemd 104
5705 CL Helmond
The Netherlands
T: +31 (0)492 593 888
E: customerservice@sunrisemedical.nl
www.SunriseMedical.nl
www.SunriseMedical.eu (International)

Sunrise Medical S.A.S
ZAC de la Vrillonnerie
17 Rue Mickaël Faraday
37170 Chambray-Lès-Tours
Tel : + 33 (0) 2 47 55 44 00
Email: info@sunrisemedical.fr
www.SunriseMedical.fr

CE UKCA

SUNRISE MEDICAL

256069-GB Rev. D 2025-01-24